2015 ROOF REPLACEMENT

PROJECT MANUAL

<u>COUNTY COURTHOUSE</u>

700 Adams St
TOLEDO, OH 43604

Board of Lucas County Commissioners
1 Government Center, Suite 800
Toledo, OH 43604

StructureTec®

Consultants ▫ Roofs/Buildings/Structures

34119 W. Twelve Mile Road, Suite 270
Farmington Hills, MI 48331

248.848.1791 (PH)

248.848.1813 (FAX)

PROJECT T14084.RFG3
JUNE 2014

SECTION 00010

TABLE OF CONTENTS

BIDDING REQUIREMENTS

00010 Table of Contents

DIVISION 01 - GENERAL REQUIREMENTS

01100 Summary of Work
01210 Allowances
01270 Unit Prices
01290 Payment Procedures
01310 Project Meetings
01330 Submittal Procedures
01430 Quality Assurance
01500 Temporary Facilities and Controls
01630 Product Substitution Procedures
01660 Product Storage and Handling Requirements
01780 Project Closeout and Warranties
01785 Operating and Maintenance Data

DIVISION 02 - SITE CONSTRUCTION

02220 Selective Demolition
02900 Landscaping

DIVISION 06 - WOOD AND PLASTICS

06100 Rough Carpentry

DIVISION 07 - THERMAL AND MOISTURE PROTECTION

07220 Roof and Deck Insulation
07531 Adhered EPDM Roofing
07620 Sheet Metal Flashing and Trim
07790 Fastening Systems
07920 Joint Sealants

DIVISION 15 - MECHANICAL

15160 Roof Drains

LIST OF DRAWINGS AND DETAILS

Drawing #	Title
RP-1	2014 Roof Replacement Plan – County Courthouse

Detail #	Title
D-1	Construction Profile – Wood Deck One Course Cover Board and Fully Adhered Single-Ply Roofing
D-2	Securement: Cover Board Fastener Pattern
D-3	Wood Block Fastening Pattern
D-4	Membrane Termination at Sloped Tile Roof
D-5	Gravel Stop Fascia System and Drain Detail
D-6	Gravel Stop Fascia
D-7	Two-Piece Reglet Counterflashing
D-8	Termination Bar Detail
D-9	Roof Drain
D-10	Curb with Removal Cap
D-11	Curb with Non-Removal Cap
D-12	Seam Cross Section with Cover Strip
D-13	Walkway Pad Installation
D-14	Field Fabricated Single-Ply Penetration Flashing
D-15	Pre-Fabricated Single-Ply Penetration Flashing
D-16	Flashing at Heated Stack Penetration
D-17	Drip Edge Fascia

END OF SECTION

SECTION 01100

SUMMARY OF WORK

PART 1 – GENERAL REQUIREMENTS

1.01 DESCRIPTION OF WORK

A. Furnish and install specified roofing, flashings, and miscellaneous materials at:

Lucas County – County Courthouse
700 Adams Street
Toledo, OH 43604

B. Area totals approximately 3, 619 square feet.

NOTE: Contractor is responsible for verification of all quantities and measurement.

1.02 WORK SUMMARY

A. General: this section is for the convenience of the Contractor only, and should not be construed as a complete accounting of all work to be performed.

B. The extent of the Work is indicated on the drawings and by the requirements of each Specification Section.

C. Base Scope of Work

1. Demolition and Roof Preparation

a. The Contractor shall be responsible for ensuring that interior finishes, carpeting, furnishings and/or equipment in the building is adequately protected from roof debris and water leaks throughout the duration of the project.
b. The Contactor shall be responsible for ensuring that exterior finishes, building and grounds are adequately protected throughout the duration of the project.
c. The Contractor shall remove obsolete roof penetrations and equipment as designated during the pre-bid phase and coordinate the installation of new deck to match existing deck at the obsolete openings as per specifications.
d. Remove debris from roof area and properly dispose of all materials off site.

NOTE: The Contractor is responsible for verifying the actual composition of the existing roof assembly.

e. Remove all base flashings.
f. Remove existing counterflashing.
g. Remove all existing fiber cants, rotted wood nailers and cants at base of curbs and walls.
h. Clean and prepare roofing substrate for application of insulation course.
i. Replace and or remediate deteriorated roof decking.
j. Reference Section 02220 – Selective Demolition.

2. Roof Decking

   a. Ensure that existing roof decking is dry, clean and suitable for new coverboard installation as specified.
   b. Remediation shall be handled on a unit cost basis.
   c. Reference Sections 06100 – Rough Caprentry.

3. Rough Carpentry

   a. Install wood nailers where required to match height of new coverboard at perimeter edge terminations.
   b. Reference Section 06100 – Rough Carpentry.

4. Roof Insulation/Fasteners

   a. Install roof coverboard per plans and specifications.
   b. Reference Section 07220 – Roof and Deck Insulation.

5. Membrane/Flashings
   a. Install specified single-ply membrane over coverboard.
   b. Reference Section 07531 – Adhered EPDM Roofing.

6. Roof Related Sheet Metal

   a. Install new counterflashings as specified.
   b. Provide shop fabricated perimeter drip edge metal as specified.
   c. Install sleeves and umbrella rain collars around all pipe projections and penetration pockets as specified.
   d. Reference Section 07620 – Sheet Metal Flashing and Trim.

7. Joint Sealants

   a. Provide roof and sheet metal related joint sealants as specified.
   b. Refer to Section 07920 – Joint Sealants.

8. Plumbing

   a. Provide two (2) new roof drain inserts tied into the existing plumbing at Roof Area E.
   b. Provide four (4) new roof drain inserts at built-in cornice gutter drain lines.
   c. Reference Section 15160 – Roof Drains.

9. Miscellaneous

   a. Perform Warranty Work as required following Consultant's 12 and 24 month warranty audits after project completion. Reference Section 01780 – Project Closeout and Warrantees.
   b. The Contractor is responsible for contacting the Consultant's office daily. Call StructureTec at (800) 745-7832 FQA Detroit ext. 3000 before proceeding with daily work.
   c. Walkpads shall be provided at all roof area access points.

10. Site Specific Requirements

a. Daily work shall begin no earlier than 7:00 a.m. and finish no later than 6:00 p.m. Monday – Friday. Weekend work can be scheduled at no additional cost to the Owner.
b. Contractors specific work schedule must be coordinated and approved by the Court Administrator and the Lucas County Capital Projects Manager a minimum of five (5) days prior to start-up.
c. All Contractor personnel shall comply with Lucas County Courthouse security requirements including and not limited to mandatory background checks prior to working on site.
d. The contractor(s) are responsible for repairing, to the level approved and accepted by StructureTec and the Lucas County Capital Projects Manager, any damage to the existing facility, including the facility interior, the facility exterior, sidewalks and lawns.

PART 2 – PRODUCTS

2.01 NOT USED

PART 3 – EXECUTION

3.01 NOT USED

END OF SECTION

SECTION 01210

ALLOWANCES

PART 1 – GENERAL

1.01 SECTION INCLUDES

A. Contingency allowance.

1.02 CONTINGENCY ALLOWANCE

A. Include in the Contract, a stipulated sum of **$10,000.00** for use upon Owner's instruction. This amount shall be included in the Base Bid.

1.03 CONTINGENCY/ALLOWANCE ALLOCATION

A. Funds will be drawn from the Contingency or Material and Labor Allowance only by AIA Change Order Form.

B. At closeout of Contract, funds remaining in Contingency Allowance will be credited to Owner by AIA Change Order Form.

PART 2 – PRODUCTS

2.01 NOT USED

PART 3 – EXECUTION

3.01 NOT USED

END OF SECTION

SECTION 01270

UNIT PRICES

PART 1 – GENERAL

1.01 PROJECT PRICING

A. Bidder shall complete the Bid Form, including all requested information.

B. Project pricing is a combination of lump sum work items and unit price work items.

1.02 UNIT PRICES

A. Bidders shall submit unit prices for each unit price item listed in the Bid Form. The amount of each unit price shall be stipulated in the space provided in the Bid Form.

B. Unit prices shall be stated in the Contractor's proposal as to the amount to be added or deducted from the base as specified, including labor, material overhead, profit and taxes.

1.03 UNIT PRICE QUANTITY MEASUREMENT

A. The Bidding Contractors shall be solely responsible for the accuracy of all measurements and for estimating the material quantities required to satisfy these Specifications.

B. The Owner reserves the right to reject the Contractor's measurement of work-in-place that involves use of established unit prices, and to have this Work measured by an independent surveyor acceptable to the Contractor at the Owner's expense.

C. Contractor shall maintain plan drawings locating all unit price repairs performed. Location and size of repairs/corrections must be located on clean drawings. Separate drawings shall be maintained for each level and building. Contractor shall submit copy of drawing identifying current quantities with each payment request. Work being invoiced must be properly identified. These drawings shall be incorporated into "As Builts" set required per Division 01.

D. Quantity measurements shall be performed as described in Specification or shown on Drawings.

PART 2 – PRODUCTS

2.01 NOT USED

PART 3 – EXECUTION

3.01 NOT USED

END OF SECTION

SECTION 01290

PAYMENT PROCEDURES

PART 1 – GENERAL

1.01 APPLICATION FOR PAYMENT

A. The form of Application for Payment shall be notarized AIA Document G702, "Application and Certification for Payment", supported by AIA Document G703, Continuation Sheet.

B. Submit three executed copies of each Application for Payment to the Consultant. One copy shall be complete, including waivers of lien and similar attachments, when required.

C. Administrative actions and submittals that must precede or coincide with submittal of the first Application for Payment include the following:

1. List of subcontractors
2. List of principal suppliers and fabricators
3. Schedule of Values
4. Contractor's Construction Schedule (preliminary, if not final)
5. Schedule of principal products
6. Submittal Schedule (preliminary, if not final)
7. List of Contractor's staff assignments
8. List of Contractor's principal consultants
9. Copies of permits
10. Copies of authorizations and licenses from governing authorities for performance of the Work
11. Initial progress report
12. Certificates of insurance and insurance policies
13. Performance and payment bonds (if required)
14. Data needed to acquire Owner's insurance

D. Progress Payments

1. Work being invoiced must be properly identified.
2. The Contractor shall submit Application for Payment to the Consultant for review and processing:
   a. For materials delivered to and stored on job site.
   b. Subsequent monthly payment requests.
3. Contractors shall maintain plan drawing locating repairs performed; location and size of repairs must be located on clean drawing. Contractor shall submit copy of drawing, identifying current quantities with each payment request. Contractor shall procure necessary drawings as specified.
4. Each Application for Payment shall be accompanied by a detailed estimate of the amounts and value of labor expended and materials purchased up to the last day of the preceding month.
5. Such payments shall be viewed by both parties as progress payments and shall not, in any way, relieve the Contractor of performance obligations under this contract, nor

shall such payments be viewed as approval or acceptance of work performed under this contract.

6. The Owner reserves the right to retain ten (10) percent of the Contract amount until final project completion.

E. Final Payment

1. Administrative actions and submittals that must precede or coincide with the final submittal for Application of Payment include the following:
   a. Final punch list report verifying compliance with provisions of the Specifications.
   b. Final Waiver of Lien executed by each supplier and subcontractor.
   c. Warranties/guarantees shall commence upon the date of final punch list verification as found on the Final Construction Review Punch List.
2. Application for Payment shall reflect adjustments and previous progress payments.

PART 2 – PRODUCTS

2.01 NOT USED

PART 3 – EXECUTION

3.01 NOT USED

END OF SECTION

SECTION 01310

PROJECT MEETINGS

PART 1 – GENERAL

1.01 DESCRIPTION

A. Work Included:

1. The Consultant will conduct project meetings throughout the construction period to enable orderly review during progress of the Work, and to provide for systematic discussion of problems.

1.02 REPRESENTATION

A. Each Contractor and major subcontractor shall be represented at every meeting by a responsible member of his organization.

1.03 SUBMITTALS

A. The proceedings of these meetings will be recorded by the Consultant, and each required representative at meetings will be furnished one copy in addition to the Owner.

B. The Consultant will conduct meetings, record notes, and distribute meeting minutes on behalf of the Owner. This, however, shall not be construed as coordinating or scheduling Contractor's Work.

1.04 DECISIONS/INTERPRETATIONS

A. All decisions and interpretations given by the Consultant at project meetings shall be on behalf of the Owner and shall be conclusive on each Contractor affected.

PART 2 – PRODUCTS

2.01 NOT USED

PART 3 – EXECUTION

3.01 MEETING SCHEDULE/DATE AND TIME/LOCATION

A. Meeting schedule will be as agreed to by Owner and Contractors at preconstruction meeting.

B. If a change in meeting date/time is required due to causes beyond control of the Owner, all concerned parties will be advised in advance of such change.

C. To the maximum extent practical, meetings will be held at the job site.

3.02 PRECONSTRUCTION MEETING

A. Meeting will be scheduled within 30 days after a Notice of commencement has been issued. Authorized representatives of the Contractor and all major subcontractors must be in attendance. The Owner will advise other interested parties and request their attendance.

B. Minimum Agenda

1. Organizational arrangement of Contractor's forces and personnel and those of subcontractors, materials suppliers, and Owner.
2. Channels and procedures for communications.
3. Construction schedule, including sequence of critical Work.
4. Contract Documents, including distribution of required copies of original documents and revisions.
5. Processing of shop drawings and other data submitted to the Consultant for review.
6. Processing of field decisions and change orders.
7. Rules and regulations governing performance of the Work.
8. Procedures for safety and first aid, security, quality control, housekeeping, and other related matters.
9. Scheduling of project meetings.
10. Project record documents.(as builts)
11. Shop drawings.

3.03 PROJECT MEETINGS

A. Attendance

1. To the maximum extent practical, the contractor and major subcontractors shall assign the same person or persons to be present as representatives at project meetings throughout progress of the Work. Subcontractors, material suppliers, and others may be invited to attend those project meetings in which their aspects of the Work are involved.

B. Minimum Agenda

1. Review, revise as necessary, and approve minutes of previous meeting.
2. Review progress of the Work since last meeting, including status of submittals for approval.
3. Identify concerns and review quality control/assurances of Work in progress and work completed.
4. Identify problems which may impede planned progress.
5. Develop corrective measures and procedures to maintain/regain planned schedule.
6. Complete other current business.

END OF SECTION

SECTION 01430

QUALITY ASSURANCE

PART 1 – GENERAL

1.01 GENERAL

A. Contractor shall provide a minimum of 48 hours notice of required site reviews to the Consultant to allow scheduling. Unless critical, such reviews shall be scheduled when sufficient areas are prepared to effectively utilize the Consultant's visit.

B. Contractor shall keep in the jobsite trailer and/or on-site at all times, the following items:

1. The most recent revision of the Drawings and Specifications, including all changes made by addenda, sketches, bulletins, change orders and approved submittals.
2. Health and Safety Data Sheets.

1.02 DAILY CALL-INS/FIELD QUALITY ASSURANCE LINE

A. Contractor must report in daily all anticipated work activities.

B. “Call-ins” must be made in the morning of anticipated work, prior to 7:30 am.

C. Message must be left on the Construction - Field Quality Control Line, number 800.745.7832 extension Detroit 3000.

D. Failure to comply with these procedures may result in a “project shut down” and/or retainage of payment schedule until compliance is satisfied.

1.03 OWNER, CONSULTANT, AND CONTRACTOR

A. Owner’s Representative on Site: The Consultant acts on behalf of the Owner to ascertain that the work is completed in accordance with the Plans and Specifications, and is entitled to conduct reviews of the Contractor’s Work and materials and to perform or witness such tests as are specified or directed. In order to avoid conflict of operations or delay in completion of the Work, the Consultant may furnish the Contractor with non-binding recommendations pertaining to the methods, sequencing and priority of the operations or work, without taking responsibility for the execution or results thereof. Only those modifications of adjustments in the Work that are stipulated by a duly executed Change Order, Change Directive, Bulletin, or other form of written authorization by the Consultant will be formally recognized and legally binding.

B. Communication to Owner: All communication from the Contractor to the Owner on Contract matters shall be through the Consultant except as otherwise specified in writing.

C. Instructions to Contractor: The Owner will issue all instructions to the Contractor through the Consultant except as otherwise specified in writing.

D. Consultant/Contractor Relationship: The Consultant is the Contractor’s single point of contact for all submittals and approvals (shop drawings, samples, tests and the like),

interpretation of the Contract Documents and changes, and claims of whatever nature. The Consultant will inform the Contractor of all decisions on questions which may arise with respect to Specifications, Plans, the Contract and the rights of other Contractors and their interface with one another. The Consultant will review for purposes of payment under the Contract the amount and quality of the Work performed and materials furnished by the Contractor.

1.04 ACCESS TO THE SITE

A. The Owner, Consultant and their authorized representatives shall have access to the site and to the Work. The Contractor shall facilitate and provide assistance for access by such persons.

1.05 CONSULTANT SITE REVIEWS

A. Materials:

1. A site review will be conducted by the Consultant prior to commencement of any work to substantiate that all materials conform to the specifications and approved submittal data. Unfit materials will be rejected and conspicuously marked. These materials shall be removed from the job site by the Contractor who in turn shall replace them with acceptable materials in a timely manner and shall not delay the progress of the job.
2. No work may commence until an acceptable amount of approved materials is at the job site and reviewed by the Consultant.
3. Any indication of an unauthorized substitution of materials will be considered a justifiable cause for rejecting the entire portion of work relating to said materials.

B. Workmanship:

1. Workmanship will be reviewed by the Consultant to the extent necessary to determine that the Work conforms to the Plans and Specifications.
2. All reviews by the Consultant will be performed in such manner as not to delay the Work unnecessarily; however, neither the Owner nor the Consultant shall be liable for such delays.
3. Contractor shall, without charge, correct any workmanship found by the Consultant not to conform to the Contract requirements.
4. If Contractor does not promptly correct rejected workmanship, the Owner may: (1), by Contract or otherwise, correct such workmanship and charge the cost thereof to the Contractor or (2) terminate Contractor's right to continue the Work in accordance with Article 13, of the "General Conditions of the Contract for Construction".

C. Certificates:

1. Any certificate for demonstrating proof of compliance of materials with the requirements of the Plans and Specifications shall be executed in three copies.
2. Each certificate shall be signed by an authorized office of the manufacturing company and shall contain:
   a. Name and address of the Contractor
   b. Project name
   c. Location

d. Quantity and dates of the tests to which the report applies

3. Certification shall not be construed as relieving Contractor from furnishing satisfactory material. If, after tests are performed on selected samples, the material is found not to meet the specific requirements, the entire order may be rejected.

D. Testing:

1. For confirmation purposes and at the discretion of the Consultant, tests in accordance with specific methods will be made by the Consultant during and upon completion of the Work. All material being used is subject to review, testing, or rejection at any time. Copies of all test results will be furnished to the Contractor at his written request. The Contractor shall be responsible for the repair and replacement of any such test areas, after the appropriate testing and observation has been conducted.
2. Contractor shall furnish samples required by the Consultant without charge, provide every facility for the securing of material samples and provide means and assistance in the verification of all scales, measures and other devices which he operates.
3. Contractor shall notify the Consultant, in writing, when tests by outside testing laboratories are required, giving reasonable notice so that the Consultant may be present at testing. It shall be the obligation of the Contractor to uncover any Work covered prior to required testing at the Contractor's cost and expense due to failure to provide notice and obtain the Consultant's review.
4. The Owner reserves the right to retest all materials which have been tested and accepted at the source of supply after the same have been delivered, prior to incorporation in the Work and to reject all materials which, when tested, do not meet the requirements of the Contract. Should Owner so elect, Owner may deduct from amounts due to the Contractor the costs of testing materials that do not conform to the Plans and Specifications.

E. While work is still in progress, it is the Contractor's responsibility to notify StructureTec prior to leaving the job site so that the "Punch List" can be implemented and executed on a timely basis.

F. These procedures will not negate or supersede periodic progress reviews as performed by the designated representatives and/or employees of StructureTec.

1.06 EXISTING ROOF SYSTEMS

A. Since existing roofing systems at the project facility are typically under a manufacturer's warranty, provide all necessary precautions and protection to prevent damage during execution of the Work.

B. Should roof damage occur, maintain necessary roofing materials at the project site to immediately implement emergency repairs. Outline and clearly identify all repair locations with spray paint or grease pencil. Contact the original roof system installer and schedule permanent roof repairs within ten (10) calendar days at no cost to the Owner.

C. The Contractor shall be responsible for required corrective action to remove and replace deficient roofing materials, where damage resulted from construction activities by the Contractor.

1.07 SCHEDULED MAINTENANCE REVIEW AND EVALUATION

A. A StructureTec Technical Representative will be required to perform:

1. A visual survey and review of the Project within 90 days of the one year anniversary of Substantial Completion.

2. A visual survey, StructureScan Infrared Survey, and review of the Project within 90 days of the two year anniversary of Substantial Completion.

B. An audit form will be processed and copies will be submitted to the Owner or Owner's Representative and the Contractor for review.

C. Scheduled maintenance items and/or technical requirements will be determined as follows:

1. Items covered under manufacturer/contractor warranty.
2. Items to be addressed as required maintenance and/or repair.

D. These requirements are part of the contract provisions and will become part of the scope of work for this project.

PART 2 – PRODUCTS

2.01 NOT USED

PART 3 – EXECUTION

3.01 NOT USED

END OF SECTION

SECTION 01500

TEMPORARY FACILITIES AND CONTROLS

PART 1 – GENERAL

1.01 TEMPORARY ELECTRIC

A. Utilities: All temporary facilities shall be subject to the Owner's approval.

B. Contractor may obtain temporary power for construction from their own generator. Temporary power service shall comply with OSHA Standards. The Contractor shall maintain these temporary services in good order throughout the project until repair Work is complete. All extension cords shall be provided by the Contractor or Subcontractor requiring the power. All required electrical equipment shall be GFIC protected.

1.02 TEMPORARY WATER

A. Owner shall provide and pay for all water used for on-site construction purposes. The Contractor shall provide and maintain necessary temporary connections to the source of temporary supply, including necessary safety devices, controls and back flow valves.

B. Contractor to provide potable drinking water for construction personnel at all times.

1.03 TEMPORARY SANITARY FACILITIES

A. Contractor shall provide, pay for and maintain sufficient and approved sanitary facilities with weather-proof enclosures. These facilities shall be clean and sanitary at all times and shall be satisfactory to the local board of health and Owner.

B. Location shall be approved by Owner.

1.04 TEMPORARY PARKING

A. Contractor's employee parking, delivery trucks, and other construction vehicle parking shall only be at areas designated by the Owner.

1.05 TEMPORARY FIRE PROTECTION

A. Contractor shall provide adequate fire protection and fire prevention for the Project and in no case less than that required by applicable City, County, State, and Federal regulations.

1.06 FIRST AID

A. Contractor shall provide a first aid kit with adequate provisions for the materials being used on site.

B. Contractor shall maintain an envelope to hang above the first aid kit which will contain all of the Health and Safety Date Sheets for materials being used on this Project.

1.07 SECURITY

A. Contractor shall be responsible for the security of their work area and equipment.

1.08 DUST AND FUME CONTROL

A. Contractor shall take all necessary precautions to keep dust confined in the present work area.

B. Contractor shall be responsible for any damage to vehicles due to the construction.

C. Contractor shall submit to the Owner, for approval, proposed methods used to contain dust, fumes, and debris in work area.

1.09 ENCLOSURES

A. Contractor shall furnish, install, and maintain for the duration of construction, all required scaffolds, tarpaulins, barricades, canopies, warning signs, steps, bridges, platforms, and other temporary construction necessary for proper completion of the work in compliance with all safety and other regulations.

1.10 FENCING OF THE CONSTRUCTION AREA

A. Contractor shall furnish and install temporary barricades compliant with local ordinances and per Owner's requirements around all ground located equipment and materials.

1.11 PROTECTION OF CONCRETE SIDEWALKS AND ASPHALT PARKING LOTS

A. Protect all concrete sidewalks and asphalt parking lots at staging locations and areas surrounding the building. Damaged areas shall be replaced or repaired at the contractor's expense.

1.12 PROTECTION OF GROUNDS

A. Protect lawn and grounds at staging areas surrounding the building. Damaged areas shall be replaced at the contractor's expense. Reference Section 02900.

1.13 HEATING

A. Contractor shall provide and maintain all heat needed for proper conduct of all operations included in the work.

1.14 TELEPHONE/PAGER SERVICE

A. Contractor shall be responsible to provide telephone service or other acceptable methods of communication services at the project site.

PART 2 – PRODUCTS

2.01 NOT USED

PART 3 – EXECUTION

3.01 NOT USED

END OF SECTION

SECTION 01630

PRODUCT SUBSTITUTION PROCEDURES

PART 1 – GENERAL

1.01 GENERAL

A. Whenever the proposal of substitute material, equipment or process is permitted by the Specifications, the proposed substitute material, equipment or process shall be submitted in accordance with the General Conditions and subject to Section 1.02 Requirements.

1.02 REQUIREMENTS

A. Consultant shall review the acceptability of the proposed substitute.

B. After the start of construction, the proposal of substitute material, equipment or process will be considered only for one of the following reasons:

1. The manufacture or production of the specified material, equipment, or process has been discontinued.
2. The specified material, equipment, or process is not available in sufficient quantity or quantities to complete the Work. Failure of the Contractor to award subcontracts in sufficient time or failure of the Contractor and/or the Subcontractor involved to place orders for material, equipment or process so as to insure delivery or execution without delaying the Work shall not establish cause for approval of substitutions.
3. Delays beyond the control of the Contractor such as, but not limited to, strikes, lockouts, storms, fires or earthquakes, preclude the procurement and delivery of material or equipment for the Project as included in Contractor's proposal.
4. Availability or an earlier delivery date for proposed substitute will advance the overall progress of the Work.
5. There will be an improvement in quality or function of the material, equipment or process.

C. If, after the start of construction, the Contractor proposes a substitute to the project, the Contractor must submit a separate request for each product, supported by complete data with drawings and samples as appropriate, including:

1. Comparison of the qualities of the proposed substitution with that specified.
2. Changes required in other elements of the work because of substitution.
3. Affect on the construction schedule.
4. Cost data comparing the proposed substitution with the product specified.
5. Any required license fees or royalties.
6. Availability of maintenance service and source of replacement materials.

D. After the start of the construction, any proposed substitute material, equipment or process shall be subject to the following conditions:

1. Submittal of the proposed substitute material, equipment or process per the General Conditions.

2. Submittal of the request for a substitution early enough to allow ample lead time for the Consultant's review, preparation of the submittals, fabrication and delivery, without delaying the Work.
3. Approval of substitutions by the Consultant and the Owner in the form of a duly executed Change Order, Change Directive, Bulletin or other form of written authorization.

PART 2 – PRODUCTS

2.01 NOT USED

PART 3 – EXECUTION

3.01 NOT USED

END OF SECTION

SECTION 01660

PRODUCT STORAGE AND HANDLING REQUIREMENTS

PART 1 – GENERAL

1.01 MANUFACTURER'S INSTRUCTIONS

A. When Contract Documents require that installation of Work shall comply with submitted manufacturer's printed instructions, upon Consultant's review, Contractor shall obtain and distribute copies of such instructions to parties involved in the Work.

B. Contractor shall maintain one complete set of submittals at the job site during installation and until completion.

1.02 TRANSPORTATION AND HANDLING

A. Contractor shall arrange deliveries of products in accordance with construction schedules and coordinate to avoid conflict with the Work and conditions at the site.

1. Deliver products in undamaged condition, in manufacturer's original containers or packaging, with identifying labels intact and legible.
2. Immediately on delivery, inspect shipments to assure compliance with requirements of Contract Documents and approved submittals and that products are properly protected and undamaged.

1.03 STORAGE AND PROTECTION

A. Contractor shall arrange storage in a manner to provide easy access for inspection and make periodic inspections of stored products to assure that products are maintained under specified conditions and free from damage or deterioration.

B. Contractor shall store products in accordance with manufacturer's instructions and as required by the technical specification, with seals and labels intact and legible.

1. Store products subject to damage by the elements in weather-tight enclosures.
2. Maintain temperature and humidity within the ranges required by manufacturer's instructions.

C. Where exterior storage is utilized, Contractor shall:

1. Store fabricated products above the ground on blocking skids, prevent soiling or staining.
2. Cover products which are subject to deterioration with impervious sheet coverings and provide adequate ventilation to avoid condensation.

D. Protection after installation

1. Provide substantial coverings as necessary to protect installed products from damage from weather, traffic and subsequent construction operations.
2. Remove products when no longer needed.

PART 2 – MATERIALS

2.01 NOT USED

PART 3 – EXECUTION

3.01 NOT USED

END OF SECTION

SECTION 01780

PROJECT CLOSEOUT AND WARRANTIES

PART 1 – GENERAL

1.01 COMPLETION

A. Project Close Out

1. Throughout the progress of the work, the Contractor shall keep a current, detailed record of changes in the installation of his own work from the conditions, locations, and layout shown on the accompanying drawings or manufacturer details. This information shall be submitted to the Consultant. This requirement does not authorize any deviations without the approval of the Owner or Owner's representative.
2. When all revisions showing work as finally installed are made, the field record drawings (as-builts) shall be delivered to the Owner before final payment is made.
3. Submit the following before final payment is made:
   a. Project record documents
   b. Guarantees and Warrantees
   c. Applicable waivers of lien
   d. Invoice(s) reflecting adjustments and previous progress payments

1.02 CLEANING AND CLOSEOUT

A. Each Contractor or Subcontractor, in addition to the responsibilities set forth in the General Conditions, shall keep the premises free from accumulation of waste materials or rubbish caused by their employees or Work.

B. At the completion of the Project, the Contractor shall restore or replace all property damaged by his Work and remove spots, paint, soil, concrete, writing, droppings, or other foreign material from Work. Remove temporary protection from the Work.

C. A punch list consisting of a drawing showing locations of unacceptable items and an attached explanation of the nature of the unacceptable work shall be delivered to the Contractor after Substantial Completion of the Project.

D. Contractor shall be responsible for maintaining work areas in a neat and orderly manner. Immediately upon completion, cleanup shall be performed to the satisfaction of the Owner or Owner's Representative. Contractor shall be responsible for the return of site-exposed surfaces to their original condition prior to the start of Work.

E. Contractor shall complete all necessary cleanup within fifteen (15) working days after receiving notification of cleanup requirements.

1.03 WARRANTIES

A. Base Bid Warranty

1. The roof system, as specified and completed, under this specification shall be covered under a manufacturer's warranty for a period of twenty (20) years.

2. The required warranties are as follows:

NDL System Warranty		
Golden Seal Warranty	Carlisle	Single-Ply EPDM
Red Shield Warranty	Firestone	Single-Ply EPDM
JM Peak Advantage	Johns Manville	Single-Ply EPDM

3. Work, as specified and completed, under this specification shall be covered under a separate contractor's warranty for a period of Five (5) years.

B. General Warranty Provisions

1. The warranty issued must include visual review by the Consultant at approximately the 12 and 24 month anniversaries of project completion and a ***StructureScan*** Thermal Imagery Survey at the approximate 24 month anniversary of project completion.
2. Samples of warranties including dollar value of coverage must be submitted with the bid submittal package.
3. Warranties shall commence upon the date of final punch list verification as found on the Final Construction Review Punch List.
4. Warranties are to be furnished by the Contractor and submitted to the Consultant for review at the time of final payment.

C. Warranty Enforcement: Defects in materials or workmanship, which are discovered and made known to the Contractor during the warranty period, shall be repaired or replaced and/or adjustments shall be made without delay upon written notification from the Owner and at no additional cost to the Owner.

PART 2 – PRODUCTS

2.01 NOT USED

PART 3 – EXECUTION

3.01 NOT USED

END OF SECTION

SECTION 01785

OPERATING AND MAINTENANCE DATA

PART 1 – GENERAL

1.01 GENERAL

A. Compile product data and related information appropriate for the Owner's maintenance and operation of products furnished under the Contract. Prepare maintenance data as specified in this Section and as referenced in other pertinent Sections of the Specifications.

B. Prepare data and provide three (3) manuals for use by the Owner's personnel.

1.02 CONTENT OF THE MANUAL

A. Contractor, name or responsible principal, address and telephone number.

B. A list of each product required to be included, indexed to the content of the volume.

1. List with each product the name, address, and telephone number of:
   a. Subcontractor or installer
   b. Maintenance contractor, as appropriate
   c. Identify the area of responsibility of each
   d. Local source of supply for products, materials, and replacement
2. Identify each product by product name and other identifying symbols as set forth in Contract Documents.

C. Product Data

1. Include only those sheets which are pertinent to the specific product.

D. Drawings

1. Supplement product data with shop and as-built drawings as necessary.

E. Copy of each warranty, guarantee, bond and service contract issued.

1. Provide information sheet for the Owner's personnel and give:
   a. Proper procedures in the event of failure.
   b. Instances which might affect the validity of warranties/guarantees or bonds.

1.03 MANUAL FOR MATERIALS AND FINISHES

A. Content for architectural products, applied materials and finishes.

1. Manufacturer's data, giving full information on products.
2. Instructions for care and maintenance.

B. Provide complete information for products as specified in each respective Section.

1.04 INSTRUCTIONS TO THE OWNER'S PERSONNEL

A. Prior to final inspection or acceptance, contractor shall fully instruct the Owner's designated maintenance personnel in the maintenance of each product and system.

B. Implement Spring and Fall roof maintenance inspection procedures to assure continued performance of the roof system. Review Consultant's maintenance inspection program.

PART 2 – PRODUCTS

2.01 NOT USED

PART 3 – EXECUTION

3.01 NOT USED

END OF SECTION

SECTION 02220

SELECTIVE DEMOLITION

PART 1 – GENERAL

1.01 SUMMARY

A. Furnish all labor, materials, equipment and supervision to demolish, haul and dispose of items in accordance with the Contract Documents.

1.02 REFERENCES

A. American National Standards Institute (ANSI): Safety Requirements for Demolition, Document A10.6.

B. Occupational Safety and Health Administration (OSHA): Construction Safety Act, Part 1926.

1.03 PERFORMANCE REQUIREMENTS

A. Contractor shall be responsible for the planning and implementation of the demolition work including the safety of persons and property. This responsibility shall not transfer to the Owner, governing authorities or Consultant.

B. The building space directly under the roof area covered by this specification will be utilized for concurrent and ongoing operations. These operations shall not be interrupted by the Work in process.

C. Contractor shall examine areas and conditions under which the Work is to occur and notify the Consultant in writing as required in the General Conditions of any conditions detrimental to the proper and timely completion of this Work.

D. Consultant's review shall be conducted to verify general conformance with the requirements of the Contract Documents.

E. Contractor shall take adequate precautions to prevent unauthorized personnel from entering the job site.

F. Contractor shall conduct demolition operations to ensure minimum interference with roads, streets, walks, and other adjacent occupied or used facilities and shall not close or obstruct streets, walks, or other occupied or used facilities without permission from authorities having jurisdiction.

G. Contractor shall maintain adjoining properties, public thoroughfares, sidewalks, and utilities to prevent damage that may be caused by the Work.

H. At no cost to the Owner, Contractor shall repair damage to adjacent facilities resulting from demolition operations.

I. Contractor shall provide necessary protection to prevent airborne construction material, debris, dust, fumes, etc. from entering occupied spaces (e.g. adjacent building, air intake).

1.04 SUBMITTALS

A. Furnish Owner and Consultant with a detailed plan to ensure that Work will be accomplished in a safe and prudent manner.

B. Submit demolition procedures, operations sequence, permits and notices authorizing demolition, certificates of severance of utility services, if required, method of traffic maintenance, permit for transport and disposal of debris, and location of disposal area.

C. Contractor shall review with the Owner and Consultant the types of equipment proposed for use during the course of the project.

PART 2 – PRODUCTS

2.01 NOT USED

PART 3 – EXECUTION

3.01 DEMOLITION

A. General

1. All products and debris resulting from demolition, shall become the responsibility of the Contractor and shall be removed from the Owner's property.
2. Disposal of these materials, including transportation thereof, shall become the responsibility of the Contractor, who shall abide by all local, state, and federal regulations relating to these materials.

B. Demolition Requirements

1. Contractor shall take all precautions during roof demolition to protect the building and adjacent surfaces from being soiled or damaged.
2. Demolish and remove existing construction only to the extent required by new construction or as otherwise indicated. Use methods required to complete selective demolition within limitations of governing regulations and as follows:
3. Proceed with selective demolition systematically. Conduct work in an order that avoids transporting removed items and debris through areas of completed Work.
4. Where traffic and/or equipment is required over any in-place roofing systems, the Contractor shall provide the following layers of protection:
   a. Minimum one inch insulation laid directly on the roof surface.
   b. Minimum 3/4 inch plywood traffic surface.
   c. Care shall be taken to secure the protection layers against blow-off or other wind related damage.
5. Remove debris from elevated portions by chute, hoist, or other device that will convey debris to grade level in a controlled descent. All debris must be directly placed into trash receptacles at the elevation the work is being performed, and later transported to the ground elevation under safe controlled conditions.

6. Close and seal all heating and ventilation ducts where required to prevent contamination and intake of fumes inside building interior.
7. Protect all glass and metal surfaces in area of Work.
8. Plug roof drains during demolition to prevent debris and materials from entering and clogging drainage pipes.
9. Coordinate the roof demolition work with the new roofing work in such a manner as to keep the new insulation and roofing materials, building, and building interior dry and watertight.
10. Remove all loose gravel, dirt and foreign debris from the roof area. Use power broom and/or closed vacuum system.
11. Remove all existing roof membrane, flashing, and insulation down to existing deck.
12. Remove defective decking as noted and/or required.
13. Remove perimeter edge and field of roof sheet metal flashings as specified.
14. Keep roof surface clean of any debris.
15. Replace all missing or damaged drain components as specified.
16. Do not store debris on roof and do not overstress roof deck.

END OF SECTION

SECTION 02900

LANDSCAPING

PART 1 – GENERAL

1.01 SUMMARY

A. Furnish all labor, materials, equipment and supervision to remove and replace any landscaping damaged by the contractor during the performance of Work.

1.02 SUBMITTALS

A. Product Data

1. Submit data indicating material characteristics, performance criteria, and any limitations.

2. Submit manufacturer's installation instructions indicating preparation, installation or other specific procedures to be followed during installation.

1.03 QUALITY ASSURANCE

A. Qualifications of Workmen: Provide at least one person who shall be present at all times during execution of this portion of the Work, who is familiar with the type of materials being installed and the proper methods for their installation, and who shall direct all Work performed under this section.

B. Protect structures, utilities, roads, trees and vegetation from damages caused by landscaping operations.

C. Standards:

1. All plants and planting material shall meet or exceed the specifications of federal, state, and local laws for plant disease and insect control.
2. Quality and size of materials shall conform to the current edition of *Horticultural Standards* for number one grade nursery stock as adopted by the American Association of Nurserymen.

1.04 DELIVERY, STORAGE AND HANDLING

A. Delivery and Storage:

1. Deliver all items to the job site in their original containers with all labels intact and legible.
2. Protec plant materials before, during, and after installation and to protect the work and materials of all other trades.

B. Replacements: In the event of damage to stored materials, make all repairs and replacements necessary to the approval of the Owner's Representative and at no additional cost to the owner.

PART 2 – PRODUCTS

2.01 SOD

A. Supplier

1. Contractor to submit to Consultant for review prior to installing.

B. Sod shall be placed within 48 hours of cutting and shall be protected and maintained during transit or storage on site as necessary to ensure vigorous growth after placement.

C. Sod remaining on the site unplaced after 48 hours will be rejected. All yellowing or otherwise discolored sod will be rejected.

D. The contractor shall inform the owner's representative 24 hours in advance of any delivery of sod.

E. Description

1. Sod shall be well established and shall contain all the dense root system of the grasses and shall exhibit vigorous healthy root growth free of noxious weeds, objectionable grasses, grubs, diseases or injurious insects.
2. Sod shall meet the applicable sections of the State Highway Specifications unless specifically called for otherwise by the consultant.

PART 3 – EXECUTION

3.01 INSPECTION

A. Ground preparation shall not be started until all stones, debris, and similar material larger than 1" in diameter have been removed, depressions and ruts filled and the entire area to be seeded and/or sodded has been accepted by the Consultant.

3.02 PROTECTION OF PERSON AND PROPERTY

A. Protection of Existing Plant Materials

1. Existing trees, shrubs, and plant materials to remain shall be protected by acceptable means.
2. Damage to above plant material shall be repaired by qualified personnel and replaced with Owner approved material.

3.03 SOD

A. General repair shall be performed by those familiar with the accepted procedures of planting and under the supervision of a qualified planting foreman.

B. Preparation of Soil

1. Prior to, but not in excess of 24 hours before sod is to be placed, the soil surface shall be worked until it is free from debris, washes, gullies, clods and stones and is in satisfactory condition.

2. The surface shall be worked to depth of not less than 3" with a disc, tiller, or other equipment approved by the owner's representative.
3. Prepared surfaces that become crusted shall be reworked to an acceptable condition for sodding.

C. Application of Fertilizer

1. Commercial fertilizer shall be applied in accordance with the State Highway Specifications.

D. Application of Sod

1. Fit sod pieces tightly together so that no joint is visible, alternate courses staggered, and tap firmly to eliminate all air pockets. Provide a true and even surface and ensure knitting without displacement of sod or deformation of the surface of sodded areas. Edges shall be buried flush with adjacent soil. Following compaction, screened topsoil shall be used to fill all cracks between sod pieces. Excess soil shall be worked into grass.

END OF SECTION

SECTION 06100

ROUGH CARPENTRY

PART 1 – GENERAL

1.01 SUMMARY

A. Section includes:

1. Furnish all labor, materials, equipment and supervision to install/replace the following:

a. Wood blocking
b. Wood curbing
c. Plywood Sheathing

1.02 REFERENCES

A. ALSC (American Lumber Standards Committee) - Softwood Lumber Standards.

B. NFPA (National Forest Products Association).

C. APA (American Plywood Association)

D. AWPA (American Wood Preservers Association) C1 – All Timber Products Preservative Treatment by Pressure Process.

1.03 SUBMITTALS

A. Product Data – Treated Wood

1. Include data for wood-preservative treatment from chemical treatment manufacturer and certification of preservative used and net amount of preservative retained.
2. include data for fire-retardant treatment from chemical treatment manufacturer and certification by treating plant that treated materials comply with requirements.

1.04 DELIVERY, STORAGE AND HANDLING

A. Inspect materials delivered to the site for evidence of contact with moisture. Reject delivery of materials with stained or wet wrappers or torn covers. Packaging labels must be readable, identify the material, and indicate conformance with the reference standard applicable to the material.

B. Store all lumber as follows:

1. Do not expose materials to moisture of any form.
2. When out-of-doors, store on clean raised platforms at least four inches above the ground surface.
3. Completely cover all lumber with weatherproof covers to protect from weather and moisture.

4. Arrange covers to allow venting; do not allow covers to extend onto the ground. Do not use polyethylene or other non-breathing cover materials.
5. Factory applied plastic wrap is not an acceptable weatherproof cover. Rooftop storage of lumber is not permitted except for materials intended for installation that same day.

1.05 PROJECT CONDITIONS

A. Prior to ordering materials, or doing any work, verify at the site all dimensions, details, and conditions which may affect the work. No allowance for additional compensation will be considered for discrepancies between dimensions indicated in the specifications and drawings and actual field dimensions, or for the Contractor's failure to comply with this requirement.

PART 2 – PRODUCTS

2.01 LUMBER MATERIALS

A. Wood Nailers/Blocking and Curbs

1. Southern Yellow Pine or Hem Fir; No. 2 grade; free from warping and visible decay.

B. Plywood Sheathing

1. Exposure 1, APA Grade C-D, Rated Sheathing, PS1-83.
   a. Thickness shall be a minimum of nominal 3/4".

PART 3 – EXECUTION

3.01 CARPENTRY

A. Roof Edge

1. Mechanically attach wood blocking. Blocking thickness: Equal to final insulation thickness. Width: Six (6) inches nominal.
2. Wood securement at roof perimeters shall be in accordance with FM Loss Prevention Data Bulletin I-49.
3. Fasteners shall be installed in two staggered rows. Spacing in any one row shall not exceed 24 inches on-center. Within eight (8) feet of outside corners spacing shall not exceed 12 inches in any one row.
4. Offset blocking layers 12 inches; weave corners.

B. Wood Curbs

1. Mechanically attach additional wood blocking on top of the curb to raise final curb height eight (8) inches minimum above new roofing plane. Blocking shall be flush with outside curb surface.

END OF SECTION

SECTION 07220

ROOF AND DECK INSULATION

PART 1 – GENERAL

1.01 SUMMARY

A. Section includes: furnish all labor, materials and supervision to install in accordance with the Contract Documents all items listed, but not limited to:

1. Installation of gypsum cover board top layer to the specified substrate.

1.02 PERFORMANCE REQUIREMENTS

A. Gypsum products shall meet or exceed the criteria of ASTM C11177; Type X, core water resistant gypsum board.

1.03 SUBMITTALS

A. Manufacturer's latest descriptive literature, installation instructions and procedures to be followed during installation.

1.04 QUALITY ASSURANCE

A. New insulation material shall have accurate dimensions and sufficient structural stability to conform to the surfaces of the roof, cants, curbs, pipes and joints.

B. Joints between boards shall be tight, except at junctions with all vertical surfaces and sumps, where ½ inch clearance shall be maintained.

C. Lay no more insulation than can be completely covered by specified waterproofing membrane during the same day.

D. Insulation that becomes wet during or after installation shall be removed and replaced with dry insulation. If the roof membrane has already been applied over such wet insulation, then the roofing membrane shall also be replaced.

E. All such replacement work shall be at no additional charge to the Owner.

1.05 DELIVERY, STORAGE AND HANDLING

A. Deliver materials to job site with packages and labels intact; identifying manufacturer, product name and lot numbers when appropriate.

B. Store materials:

1. In accordance with applicable manufacturer's recommendations and Material Safety Data Sheets.
2. In a suitable and designated area at the job site.
3. Support materials off the ground and cover with materials that create a weatherproof barrier. Factory applied plastic wrap is not an acceptable weather proof cover.

4. Protect insulation from the weather at all times.

C. The designated staging area shall be restricted to storage of materials and related equipment.

1.06 PROJECT CONDITIONS

A. Environmental Conditions:

1. Do not proceed with work under threatening or during unfavorable weather conditions.
2. If work is interrupted by weather, provide the necessary protection for newly installed materials and to keep building weather tight. Any materials damaged as a result of inclement weather shall be replaced at the Contractor's cost.

B. Existing Conditions:

1. Coordinate the Work with existing construction not included within this Section. This includes sequencing the Work in order to provide proper interfacing with adjoining building elements, as well as ensuring the weather proofing integrity of the Work.

1.07 SCHEDULING

A. Sequence Work to ensure base sheet materials are in place before beginning the Work of this Section.

PART 2 – PRODUCTS

2.01 COVER BOARD MATERIAL

A. Gypsum Cover Board: Pre-primed glass mat reinforced water resistant gypsum board, square edges, 1/2 inches thick, complying with ASTM C1177; DensDeck Prime or Securock.

1. Maximum board size: 4' x 8'

2.02 RELATED COMPONENTS

A. Compressible Insulation: Fiberglass Batt Insulation, R11 (minimum), conforming to ASTM C665, Type 1 (unfaced).

B. Tapered Edge Strip: ASTM C208, impregnated fiberboard tapered from 1-5/8 inch to 1/8 inch (on 18 inch dimension), size 18 x 48 inches.

PART 3 – EXECUTION

3.01 THERMAL INSULATION APPLICATION

A. General

1. Neatly cut insulation boards to fit around all penetrations through the roof deck. At locations where less than a full size sheet of insulation is required, use the largest size practical to fill in the area. Do not install numerous small sections of the insulation at these locations.
2. Insulation boards with damaged facer sheet or broken edges shall not be incorporated into the work.
3. Fill gaps between insulation boards and between insulation boards and walls, curbs, blocking, and equipment with additional insulation material. Gaps between insulation boards in excess of 1/4 inch will not be accepted.
4. Protect all insulation from weather and standing water at all times. Install no more insulation than can be covered with the roofing membrane on the same day.
5. Tapered insulation edge stripping shall be installed at all perimeter edge details unless otherwise specified to provide for a smooth transition of new membrane and flashings as specified.

B. Thermal Insulation – Plywood Deck (Thermal Barrier Mechanically Fastened)

1. Cover Board

   a. Insulation securement requires one fastener every two square feet of board space. All insulation joints shall be staggered a minimum of twelve (12) inches.
   b. Secure insulation boards to the deck with Factory Mutual (FM) and insulation manufacturer's approved fasteners in accordance with current FM approval guide and FM Loss Prevention Data Sheet 1-28.

END OF SECTION

SECTION 07531

ADHERED ETHYLENE-PROPYLENE-DIENE-MONOMER (EPDM) ROOFING

PART 1 – GENERAL

1.01 SUMMARY

A. Section Includes:

1. Furnish all labor, materials, equipment and supervision to provide the following in accordance with the Contract Documents.

a. Adhered EPDM membrane roof system.
b. Flashing and related components/accessories to provide a complete and warranted roofing system.

1.02 REFERENCES

A. Underwriters' Laboratories, Inc., Building Materials Directory

B. Manufacturer's Single-Ply Roofing Product Data and Application Guidelines

C. Factory Mutual System Approval Guide

1.03 PERFORMANCE REQUIREMENTS

A. General Performance: Installed membrane roofing and base flashings shall withstand specified uplift pressures, thermally induced movement, and exposure to weather without failure due to defective manufacture, fabrication, installation, or other defects in construction. Membrane roofing and base flashings shall remain watertight.

B. Material Compatibility: Provide roofing materials that are compatible with one another under conditions of service and application required, as demonstrated by membrane roofing manufacturer based on testing and field experience.

C. FM Approvals Listing: Provide membrane roofing, base flashings, and component materials that comply with requirements in FM Approvals 4450 and FM Approvals 4470 as part of a membrane roofing system for Class 1 or noncombustible construction. Materials with FM Approval markings.

D. Fire Hazard Classification: UL Class A.

E. Wind Speed: 75 mph

F. Wind Uplift Ratings: 74 psf field; 105 psf perimeter; 135 psf corners.

1.04 SUBMITTALS

A. Product Data:

1. Submit Manufacturer's latest descriptive literature for each type of manufactured roofing materials as specified.

B. Materials List:

1. List of materials proposed to be furnished and installed under this portion of the Work.
2. This shall in no way be construed as permitting substitution of materials for those specified.

C. Shop Drawings

1. Shop drawings shall indicate installation layout, installation details, joint locations, special configurations and expansion provisions as required for this project.
2. Shop drawings shall not consist of a reproduction of the Consultant's details, but rather shall provide supplemental information pertaining to specific dimensions, sequencing requirements, joints and laps, as well as provisions for expansion and contraction as may be required for completion of the Work.

D. Manufacturer's Information:

1. Copy of system Manufacturer's inspection report of completed roofing installation.

1.05 QUALITY ASSURANCE

A. Manufacturer: Company specializing in manufacturing products specified in this Section with a minimum of ten years documented experience and that has UL listing and FM approval for membrane roofing system specified herein.

B. Applicator: Company specializing in performing Work of this Section with minimum of five years documented in-service experience approved, authorized, or licensed by roofing system manufacturer to install manufacturer's product and that is eligible to receive manufacturer's warranty.

1.06 DELIVERY, STORAGE, AND HANDLING

A. Deliver roofing materials to Project site in original containers with seals unbroken and labeled with manufacturer's name, product brand name and type, date of manufacture, approval or listing agency markings, and directions for storing and mixing with other components.

B. Store liquid materials in their original undamaged containers in a clean, dry, protected location and within the temperature range required by roofing system manufacturer. Protect stored liquid material from direct sunlight.

1. Discard and legally dispose of liquid material that cannot be applied within its stated shelf life.

C. Handle and store roofing materials and place equipment in a manner to avoid permanent deflection of deck.

1.07 PROJECT CONDITIONS

A. Advise Owner when volatile materials are to be used near air ventilation intakes so that they can be shut down or blocked as Owner requires.

B. Environmental Requirements

1. Do not work in rain, snow or in presence of water.
2. Do not install materials marked “keep from freezing” when daily temperatures are scheduled to fall below 40 degrees F.
3. Remove any work exposed to freezing.
4. Do not apply roofing membrane to damp or frozen deck surface.
5. Do not expose materials vulnerable to water or sun damage in quantities greater than can be waterproofed the same day.

1.08 SCHEDULING

A. The roof and building must be maintained watertight at the end of each day.

B. Completion of Work shall be defined as the installation of all specified roof preparation, insulation and field membrane.

C. Flashings, counter flashings, sheet metal, fasteners, and sealant work shall be coordinated and installed by the Contractor during the course of the Work.

PART 2 – PRODUCTS

2.01 EPDM MEMBRANE ROOFING

A. General

1. Comply with quality control, references, specification and manufacturer’s data.
2. Products containing asbestos are prohibited. Use only asbestos-free products.

B. EPDM: ASTM D 4637, Type I, non-reinforced uniform, flexible EPDM sheet.

1. Manufacturers:

a. Carlisle SynTec Incorporated.
b. Firestone Building Products.
c. Johns Manville

2. Thickness: 90 mils, nominal.
3. Exposed Face Color: Black.

2.02 MATERIALS

A. Sheet Flashing: 60-mil thick EPDM, partially cured or cured, according to application.

B. Bonding Adhesive: Manufacturer's standard, solvent based.

C. Seaming Material: Manufacturer's standard, synthetic-rubber polymer primer and 3-inch wide minimum, butyl splice tape with release film.

D. Seam Cover Strip: minimum five (5) inch wide stripping of pressure sensitive EPDM seam flashing membrane as recommended by the manufacturer.

E. Lap Sealant: Manufacturer's standard, single-component sealant.

F. Water Cutoff Mastic: Manufacturer's standard butyl mastic sealant.

G. Metal Termination Bars: Manufacturer's standard, predrilled stainless-steel or aluminum bars, approximately 1 by 1/8 inch thick; with anchors.

2.03 WALKWAY PADS

A. Flexible Walkways: Factory-formed, nonporous, heavy-duty, solid-rubber, slip-resisting, surface-textured walkway pads approximately 3/16 inch thick, and acceptable to membrane roofing system manufacturer.

PART 3 – EXECUTION

3.01 EXAMINATION

A. Verify surface and site conditions as satisfactory to receive work.

B. Do not begin roofing until all unsatisfactory conditions are corrected. Beginning work constitutes acceptance of conditions.

C. Verify that work of other trades penetrating roof deck or requiring men and equipment to traverse roof deck has been approved by Owner, Consultant, manufacturer and roofing contractor.

D. Check projections, curbs, and deck for inadequate anchorage, foreign material, moisture, and unevenness that would prevent proper execution of new roofing system.

E. Verify deck surfaces are dry and free of snow or ice.

3.02 PROTECTION

A. All roofing, flashing, insulation, or other materials to be incorporated into the work shall be installed and sealed in a watertight manner on the same day.

B. At the start of each workday, drains within daily work area shall be plugged. Plugs are to be removed at the end of each workday.

C. Roof materials shall not be scraped, torn, bent, or otherwise damaged during unloading, storage or installation. Any materials, which have been mistreated or weathered, shall not be acceptable for application.

D. All surfaces shall be smooth, dry, and free from dirt, debris, and foreign matter before any treatment is initiated.

E. Pumping or spraying equipment shall be located at a safe distance from buildings and shall be subject to the approval of the Owner. The Contractor shall be responsible for exercising all reasonable precautions to avoid fires being started, and shall provide suitable fire extinguishers, which are to be located so that they can be used when required. Competent operators shall be in attendance at all times when equipment is in use.

F. Preparation work shall be limited to those areas that can be covered with installed roofing material on same day or before arrival of inclement weather. Arrange work sequence to avoid use of newly constructed roofing for storage, walking surface, and equipment movement. Move equipment and ground storage areas as work progresses.

G. Prior to the application of any seam overlays, the Owner's Representative must review and approve all surface preparation. Should any deficiencies be found, the contractor shall correct prior to installing the seam overlay.

H. Provide clean plywood walkways and take other precautions required to prevent tracking of aggregate from existing membrane into new work area where aggregate pieces can be trapped within new roofing membrane. Contractor shall instruct and police his workmen to ensure that debris is not tracked into new work. Discovery of entrapped debris within new membrane is sufficient cause for rejection.

3.03 GENERAL WORKMANSHIP

A. Substrate: Free of foreign particles prior to laying roof membrane.

B. Phased roofing application will not be permitted.

C. Traffic and Equipment: Protect completed single-ply roofing. Limit traffic over completed Work. Do not store equipment on roof membrane.

D. Entrapped Debris: Not permitted within new membrane. Its discovery is sufficient cause for rejection.

E. Base Flashing Height: Not less than eight inches above finished roof surface, unless otherwise designated in writing and authorized by the Consultant.

F. Elastomeric Flashing Adhesive: Allow solvent to flash prior to installation of flashing sheet.

3.04 EPDM MEMBRANE INSTALLATION

A. Membrane Installation (Adhered Single Ply)

1. Place membrane perimeter sheet over substrate surface without stretching. Allow membrane to relax a minimum of 30 minutes before final positioning, attaching and splicing.

2. Adjust membrane sheet to final position allowing for a minimum lap width of four inches. Membrane panels shall be installed so that seams shed the flow of water in a shingle fashion.
3. Fold back half of the membrane sheet onto itself without wrinkles to expose the underside meeting surface of sheet and insulation.
4. Sweep mating surfaces with a stiff broom to remove any accumulated dusting agent or dirt.
5. Apply membrane bonding adhesive with either a solvent resistant paint roller or commercial grade adhesive sprayer. A uniform thickness of bonding adhesive shall be applied to both surfaces in accordance with manufacturer's requirements.

   NOTE: Adhesive shall not be applied over any area or edge of membrane sheet that is to be later spliced to another sheet or flashing. All bonding adhesive must be removed from the seam area.

6. Place membrane into adhesive in accordance to manufacturer's requirements and standards after bonding adhesive flashes off. Roll into place to minimize wrinkles.
7. Broom membrane after placement with a stiff bristle push broom to compress membrane sheet to substrate and remove entrapped air.
8. Repeat procedure to the remaining un-adhered half of the membrane sheet.
9. Install succeeding membrane sheet in same manner allowing for a minimum four inch overlap tolerance with adjoining sheets.
10. Where possible, extend field membrane as flashing over walls, parapets, curbs, etc. Provide membrane securement as specified in this Section.
11. Install membrane into roof drains in accordance with manufacturer's requirements.
12. Set membrane in manufacturer's recommended sealant. Install roof drain clamping ring and tighten all bolts to provide constant compression on roof system components.
13. Cut membrane sheet within drain bowl area as recommended by roof system manufacturer. Install drain strainer/domes.

B. Membrane Seaming

1. Fabricate membrane seams using seam tape (or splice adhesive where required) in accordance with the roof system manufacturer's latest recommended installation procedures and requirements.
2. Broom across fabricated seams; remove wrinkles/entrapped air; ensure positive contact.
3. Hand roll across seam with two inch silicone hand roller to ensure positive contact. Roll first across the seam and then along the entire length of the seam.
4. Install a minimum six inch square patch of uncured EPDM flashing or pressure sensitive joint cover flashing membrane as recommended by the manufacturer over the joints at offsetting roll end laps. Hand roll to ensure positive contact.
5. Where roll end laps are continuous, overlay the lap with six inch wide strip of uncured EPDM flashing or pressure sensitive joint cover membrane as recommended by the manufacturer. Hand roll to ensure positive contact.
6. Check seams for continuity; leave no voids.
7. Caulk exposed leading edges with approved sealant and in accordance with the manufacturer's requirements for seam edge treatment.

C. Membrane Seams Stripping

1. All membrane seams shall be overlaid with specified seam cover stripping of pressure sensitive EPDM seam flashing membrane as recommended by the manufacturer. Clean and prime mating surfaces. Apply self-adhering pressure sensitive flashing membrane and hand roll to ensure positive contact.
2. Check seams to continuity; leave no voids.
3. Caulk exposed leading edges with approved sealant, and in accordance with the manufacturer's requirements for seam edge treatment.

D. Walkway Pads

1. Install specified walkway pads at locations to be designated by the Owner's representative.
2. Layout premanufactured pads so that flat surface is over EPDM membrane. Space pads a maximum of three inches to allow for drainage.
3. Adhere pads to EPDM membrane as recommended by the roof system manufacturer.
4. Install premanufactured pads below wood support blocking (i.e. gas and electrical lines, small units, etc.). Pads may be cut to required size.

3.05 FLASHINGS

A. Parapet Wall and Base Flashing

1. Remove existing flashing and counterflashing materials to substrate.
2. Install wood blocking as specified in Section 06100 and/or required by the manufacturer.
3. Install new roof membrane, as specified.
4. Install membrane base securement at walls and curbs.
5. Install the specified membrane sheet continuous as flashing at walls and curbs. Install the flashing membrane in accordance with the manufacturer's requirements for adhesion and appropriate substrate.
6. Where possible, the flashing sheet shall continue up the wall, curb, or over the top of wood blocking at perimeter edges. The flashing sheet shall be nailed off on the front side of wood blocking six inches on center with one inch diameter cap nails.
7. Seal top edges of flashing sheet with a bead of specified butyl sealant installed between the substrate and backside of the flashing as detailed.
8. Firmly press top of flashing sheet into butyl sealant.
9. Install termination bar across top edge of base flashing assembly.
10. Mechanical securement shall be on 12 inch centers.
11. Wipe top of bar clean with metal cleaner prime metal surface to receive sealant with metal primer. Allow to dry.
12. Apply approved elastomeric sealant to the top of pressure bar. Provide watershed. Tool neatly.

B. Curbed Projection Flashing

1. Remove mechanical equipment from curb. Install additional blocking to raise curb a minimum height of eight inches above final roof surface.
2. Install new roofing membrane and flashing system per the manufacturer's flashing requirements.

3. Re-install fan/exhaust onto curb. Re-fasten with approved fasteners and rubber grommets, one fastener minimum on each side of curb.
4. Un-insulated curbs requiring flashing on vertical sides of the curb, shall receive one course of insulation prior to installing the flashing. The insulation shall be securely attached prior to adhering the flashing.
5. Install specified slip; insert counter flashing at units, which cannot be removed during flashing installation.

C. Fascia Installation

1. New roof membrane shall extend out and over wood blocking. Nail membrane to the front side of the wood blocking six inches on center with one inch cap nails.
2. Provide air block seal using roof system manufacturer's recommended sealant.
3. Install new sheet flashing along and adhered to the continuous cant dam cleat with solvent based bonding adhesive. Flashing shall extend down outside vertical face of cleat a minimum 4 inches. Lap flashing onto membrane field sheet minimum 6 inches.
4. Construct seam splice and strip-in with cover tape.

D. Plumbing Vents

1. Install new roofing system to plumbing vent.
2. Install pre-molded pipe boot flashings, per the manufacturer's requirements.
3. Apply water block sealant behind upper leading edge of pipe boot.
4. Install draw band clamp and sealant for securement of pipe boot to penetration.
5. Install specified rain collar over all pipe flashings as detailed.

E. Round Protrusions (Stacks, Round Equipment Supports, Small Pipes, Conduits, etc.)

1. At heat stacks, install new metal isolated flashing. Secure to roof deck.
2. Projections that are 12 inches in size or larger on any side require installation of new treated wood blocking for securement of metal flashings.
3. Install new roof membrane to penetration.
4. Cracks and openings around flashing projection will be filled with compressible insulation. Clean and prime projections eight inches above the deck, allow to dry.

3.06 DAILY WATER STOPS / TIE-INS

A. Clean and dry the surface of the existing single ply roof system along edges of termination.

B. Install dead-man insulation fillers at insulation staggers or voids between new and existing roof insulation.

C. Position new single ply membrane to allow for a minimum six inch overlap onto surface of existing roofing. Adhere mating surfaces as recommended by roof system manufacturer.

D. Check seams for continuity; leave on voids.

E. At the beginning of next day's work, remove temporary connection by cutting along edge of existing roof system.

END OF SECTION

SECTION 07620

SHEET METAL FLASHING AND TRIM

PART 1 - GENERAL

1.01 SUMMARY

A. Section Includes:

1. Furnish all labor, materials, equipment and supervision to install in accordance with the specifications and drawings all items listed, but not limited to:

a. Shop Fabricated Fascia components
b. Shop Fabricated Sheet Metal Flashing components
c. Field of the Roof Sheet Metal components

1.02 REFERENCES

A. ASTM A 666 - Austenitic Stainless Steel Sheet, Strip, Plate, and Flat Bar.

B. ASTM B 32 - Specification for Solder Metal.

C. SMACNA (Sheet Metal and Air Conditioning Contractors National Association) Architectural Sheet Metal Manual, latest edition.

D. NRCA (National Roofing Contractors Association) - Roofing and Waterproofing Manual, latest edition.

E. ASTM A 653/A0653M - Steel Sheet, Zinc Coated (Galvanized) of Zinc-Iron Alloy-Coated by the Hot-Dip Process.

F. ASTM B 209/B 209M - Specification for Aluminum and Aluminum-Alloy Sheet and Plate

G. ANSI/SPRI ES-1, Wind Design Standard for Edge Systems Used with Low-Slope Roofing Systems.

1.03 PERFORMANCE REQUIREMENTS

A. General Performance: Installed sheet metal flashings shall withstand specified uplift pressures, thermally induced movement, and exposure to weather without failure due to defective manufacture, fabrication, installation, or other defects in construction.

B. Material Compatibility: Provide sheet metal materials that are compatible with one another under conditions of service and application required..

C. Prefabricated and Shop Fabricated Fascia

1. All perimeter sheet metal fascia installations shall be fabricated and installed in accordance with ANSI/SPRI ES-1, “Wind Design Standard for Edge Systems Used with Low Slope Roof Systems.

2. System shall provide a minimum safety factor of 2 on maximum wind loads and/or provide a minimum wind resistance of 180 psf.

   a. RE-2, Pull-off test for edge flashings.

1.04 SUBMITTALS

A. Product Data:

1. Submit Manufacturer's latest descriptive literature for each type of sheet metal materials as specified.

B. Materials List:

1. List of materials proposed to be furnished and installed under this portion of the Work.
2. This shall in no way be construed as permitting substitution of materials for those specified.

C. Shop Drawings: For roofing system. Include plans, elevations, sections, details, and attachments to other work.

1. Metal profiles and attachment methods.
2. Identification of materials, thickness, weight and finish for each item, and locations for each to be installed.

D. Manufacturer's Information:

1. Installation Instructions: Submit special procedures for perimeter conditions requiring special attention.
2. Manufacturer's Certificate: Certify submitted products meet or exceed specified requirements.

1.05 QUALITY ASSURANCE

A. Manufacturer: Company specializing in manufacturing products specified in this Section with a minimum of ten years documented experience and that has UL listing and ES-1 verified testing and FM approval for sheet metal system specified herein.

B. Applicator: Company specializing in performing Work of this Section with minimum of five years documented in-service experience approved, authorized, or licensed by manufacturer to install manufacturer's product and that is eligible to receive manufacturer's warranty.

1. Applicator will be required to submit manufacturer's ANSI/SPRI ES-1 test report verifying safety factor on design wind load as specified.

1.06 DELIVERY, STORAGE, AND HANDLING

A. Stack material to prevent twisting, bending, abrasion, and to provide ventilation. Slope metal sheets to ensure drainage.

B. Prevent contact with materials causing discoloration or staining.

1.07 COORDINATION

A. Coordinate work of this Section with interfacing and adjoining work for proper sequencing of each installation.

B. Coordinate with Work of Other Sections for installing recessed flashing reglets.

PART 2 – PRODUCTS

2.01 SHOP FABRICATED METAL COMPONENTS

A. General Fabrication

1. Form all sheet metal pieces in longest practical lengths.
2. Hem exposed edges on underside of all perimeter systems every six (6) feet and all ends; miter and seam corners.

B. Fascia Systems

1. Cleat/Cant Dam

a. 22 gage galvanized, face and top fastened.
b. Minimum four (4) inch flange and ¾ inch to 1 inch cleat return. Vertical face shall extend below perimeter wood blocking by a minimum of one (1) inch.

2. Fascia Metal

a. Pre-Finished Galvanized Steel Sheet: ASTM A 924/A 924M, Grade A, 24 gage core steel, shop pre-coated with fluoropolymer (Kynar/Hylar) coating; color as selected by Owner from manufacturer's standard colors.
b. Mitered Corners: Solid insude and outside fabricated corners are required to ensure complete coverage with sheet metal.

C. Counterflashing

1. Reglet and Slip Insert Counterflashing

a. Materials
1) Pre-Finished Galvanized Steel Sheet: ASTM A 924/A 924M, Grade A, 24 gage core steel, shop pre-coated with fluoropolymer (Kynar/Hylar) coating; color as selected by Owner from manufacturer's standard colors.

D. Metal components used for flanges, rain collars and penetration pockets within the field of roof as specified shall be: Stainless Steel: ASTM A 666, Type 304, soft temper, 24 gage thick; smooth finish.

2.02 ACCESSORIES

A. Secondary Waterproofing Membrane: Ice & Water Shield by Grace Construction Products.

B. Refer to Section 07790 – Fastening Systems for specific fastener requirements for the substrate conditions encountered.

C. Solder: ASTM B 32; type suitable for application and material being soldered with compatible flux.

PART 3 – EXECUTION

3.01 EXAMINATION

A. Verify roof openings, curbs, blocking pipes, sleeves, ducts, and vents through roof are solidly set, reglets in place, and nailing strips located.

B. Verify roofing terminations and base flashings are in place, sealed, and secure.

C. Verify surfaces to receive sheet metal flashings are clean and in sound condition.

D. Examine substrates and conditions under which sheet metal flashing and trim are to be installed and verify that work will properly commence. Do not proceed with installation until unsatisfactory conditions are correct.

3.02 GENERAL REQUIREMENTS

A. Examine the areas of Work and verify that existing conditions are acceptable for the specified installation procedures. Report, in writing, adverse conditions that could affect the performance of the Work within five calendar days. Absence of written notification will indicate the Contractor's acceptance of existing project conditions.

1. Verify surfaces to receive sheet metal are clean and in sound condition.
2. Examine substrates and conditions under which sheet metal components are to be installed and verify that Work will properly commence.

B. Measurements: Before ordering materials or performing work, obtain and verify all measurements at the building site. Exact measurements are the Contractor's responsibility.

C. Preparation:

1. Secure flashings in place using specified fasteners.
2. Fit flashings tight in place. Make corners square, surfaces true and straight in planes, and lines accurate to profiles.
3. Seal metal joints watertight.

D. Manufacturer's Recommendations: Comply with the manufacturer's written approved installation instructions and with any governing regulations and industry standards applicable to the Work.

E. Form sheet metal on a bending break. Perform shaping, trimming, and hand seaming in the shop as far as practicable, with the proper sheet-metal working tools. Make the angle of the bends and the folds for interlocking the metal with full regard for expansion and contraction, to avoid buckling or other deformation in service. All lines shall be straight and crisp except where thickness of metal dictates radius bend, and all exposed edges shall be hemmed 1/2 inch minimum.

F. Soldering - Stainless Steel Flashing: Prior to soldering, mechanically clean all metal to be soldered with steel wool or by other acceptable means, apply flux, and pre-tin. For lead coated copper, remove lead coating by sanding or grinding to produce bright red surface prior to applying flux and pre-tinning. Clean metal again if it is not soldered on the same work day. Perform all soldering with well heated heavy (10 pounds per pair) irons with tinned clean blunt tips. Do not use torches. Apply enough heat to sweat the solder through the full width of the seam. Close clinch lock seams gently with a block of wood and mallet, then flux and show at least one full inch of continuous solder. Whenever possible, do all soldering in flat position. All sloped and vertical seams shall be laced and soldered a second time. Wipe and wash clean soldered joints to remove all traces of acid from the flux after the joints are made.

G. Prefabricated Transitions/Terminations:

1. Provide pre-fabricated corner pieces with joints locked, riveted, and soldered watertight. Space rivets at 1 inch on-center in staggered pattern unless otherwise indicated.

3.03 INSTALLATION OF SHOP FABRICATED METAL COMPONENTS

A. Fascia System

1. Prior to setting and nailing horizontal flanges of metal edge, install a layer of specified butyl based sealant between substrate blocking and metal flange.
2. Fabricate and install metal edge detail with formed drip edge incorporating a ¾ inch lock.

   a. Flange Width: Four inches (minimum)
   b. Rise: ¾ inch x 45 degrees

3. Position cleat square at perimeter edges and secure vertically to substrate using specified fasteners spaced no greater than six (6) inches on center.
4. Install fascia system over fully secured cleat. Secure fascia bottom with a s/4 inch lock. Gap fascia ends ½ inch; overlap cleat joints one inch. Cover fascia ends with enclosure profiled to slide through gap between fascia joints.
5. Install mitered and sealed corners.
6. Nail interior portion of fascia flange to wood blocking three inches o.c., staggered.

B. Termination Bar/Counterflashing (Wall Transitions)

1. Install termination bar across top edge of base flashing assembly.
2. Mechanical securement shall be on six inch centers.

3. Wipe top of bar clean with metal cleaner. Prime metal surface to receive sealant with metal primer. Allow to dry.
4. Apply approved elastomeric sealant to the top of pressure bar. Provide watershed. Tool neatly.
5. Install counterflashing detail over top of pressure bar in conformance to counterflashing detail, and approved manufacturer's specification requirements.
6. Insert flashings into reglets to form tight fit. Secure in place with lead wedges. Pack remaining spaces with lead wool. Seal flashings into reglets with sealant.

C. Round Protrusions

1. Round protrusions will be flashed with a two piece flange and umbrella metal flashing.
2. Flanges and umbrellas shall be constructed of stainless steel.
3. All seams and splices shall be soldered. Flanges that will not slide over the top of the pipe will require job site soldering. Clean and prime top and bottom sides of flanges.
4. Mechanically fasten flashing flange to treated wood nailers beneath.
5. Set umbrella and seal the umbrella with two side Butyl tape on inside flange/face.

   NOTE: On "hot" stack projections, heat resistant gasket shall be installed in lieu of Butyl tape.

6. Secure clamp at umbrella. Apply a heavy cove bead of elastomeric sealant to the upper leading edge. Tool in place.

7. At small pipes:

   a. Fabricate and install stainless steel umbrella with minimum one inch flange/face.
   b. Wipe clean top of umbrella and projection with metal cleaner.
   c. Apply elastomeric sealant to the stack sheet metal interface.
   d. Provide watershed. Tool neatly.

8. Prime top of flange with asphalt primer, as required.

D. Slip Insert Counterflashings At Roof Top Units

1. Install specified counterflashing behind the existing roof top unit flashing receiver.

3.04 FIELD QUALITY CONTROL

A. Inspection will involve surveillance of Work during installation to ascertain compliance with specified requirements.

END OF SECTION

SECTION 07790

FASTENING SYSTEMS

PART 1 – GENERAL

1.01 SUMMARY

A. Section includes:

1. Furnish all labor, materials, equipment, and services to prepare and install the following:

a. Insulation to Wood Deck
b. Wood to Wood
c. Galvanized Sheet Steel to Wood
d. Termination Bar/Counterflashing to Masonry or Concrete
e. Wood to Concrete
f. Metal to Metal

1.02 SUBMITTALS

A. Product data:

1. Submit manufacturer's latest descriptive literature, installation instructions and/or procedures to be followed during installation.

B. Materials list:

1. List of materials proposed to be furnished and installed under this portion of the Work.
2. This shall in no way be construed as permitting substitution of materials for those specified.

1.03 DELIVERY, STORAGE AND HANDLING

A. Deliver materials to job site with packages and labels intact identifying manufacturer, product name and lot numbers when appropriate.

B. Store approved materials neatly in a suitable and designated area at the job site. Support materials off the ground and covered.

C. Use necessary means to ensure safe storage and use of material, as well as prompt and safe disposal of waste.

PART 2 – PRODUCTS

2.01 MATERIALS/MANUFACTURERS

A. Insulation to Wood Deck

1. Accepted Manufacturers:

a. Fasteners as available by roof Manufacturer for system warranty.

2. Screw Length: Minimum length of 4 inches.

B. Wood to Wood

1. General
   a. Type: Hot dip galvanized, common, annular ring nail.
   b. Length: Sufficient to penetrate underlay blocking 1-1/4 inch

2. Acceptable Manufacturers:
   a. Independent Nail, Inc., Bridgewater, MA
   b. W.H. Maze Co., Peru, IL
   c. National Nail Co., Grand Rapids, MI
   d. Hillwood Manufacturing Co., Cleveland, OH

C. Galvanized Sheet Steel to Wood

1. FS FF-N-105B Type II, Style 20, roofing nails, 10/12 gauge galvanized steel wire, 3/8" to 7/16" diameter flat head, diamond point, round, barbed shank.
2. Length: Sufficient to penetrate wood 3/4 inch minimum or just through wood decking.

D. Termination Bar/Counterflashing to Masonry or Concrete

1. Tapcon 1/4 inch diameter, Phillips flat head anchor with EPDM washer, by Buildex Division of ITW, Itasca, IL
2. Kwik-Con II, 1/4 inch diameter fastener, by Hilti Corp., Tulsa, OK
3. Length: Sufficient to provide 1-1/4 inch embedment minimum.

E. Wood to Concrete

1. Confas screw, by Construction Fasteners, Inc., Wyomissing, PA
2. Con-Fixx screw, by Fabco Fastening Systems, West Newton, PA
3. Gripcon, by Gripcon Masonry Fastening, Albany, NY
4. Olympic (heavy duty screw), by Olympic Manufacturing Group, Inc., Agawam, MA
5. Tapcon 1/4 inch diameter, Phillips flat head anchor, by Buildex Div, of ITW, Itasca, IL
6. Kwik-Con II, 1/4 inch diameter fastener, by Hilti Corp., Tulsa, OK
7. Length: Sufficient to provide 1-1/2 inch embedment minimum.

F. Metal to Metal

1. Zip screw with EPDM washer, by Tech Specialties
2. Length: sufficient to penetrate substrate by ½ inch.

PART 3 – EXECUTION

3.01 AS DETAILED PER APPROPRIATE SECTION AND SCOPE OF WORK.

END OF SECTION

SECTION 07920

JOINT SEALANTS

PART 1 – GENERAL

1.01 SUMMARY

A. Section Includes:

1. Furnish all labor, materials, equipment and supervision to install in accordance with the specifications and drawings all items listed, but not limited to:

a. Sealant at Sheet Metal Components.
b. Sealant at Base Flashing Terminations.

1.02 PERFORMANCE REQUIREMENTS

A. General Performance: Installed sealant materials shall withstand specified pressures, thermally induced movement, and exposure to weather without failure due to defective manufacture, fabrication, installation, or other defects in construction.

B. Material Compatibility: Provide sealant materials that are compatible with one another under conditions of service and application required.

1.03 SUBMITTALS

A. Product Data:

1. Submit Manufacturer's latest descriptive literature for each type of sealant materials as specified.
2. Pre-installation Compatibility and Adhesion Testing: Test elastomeric sealants and accessories with samples of each joint substrate material for compatibility, adhesion, and freedom from staining. Include recommendations for substrate preparation and primers for proper adhesion, and solvents for cleaning.
3. Field reports from the sealant manufacturer representative for periodic site visits made to review the work in-progress. The field report should provide information regarding type of work in-progress during the visit, whether the meets manufacturer guidelines and the requirements of this Section, recommendations for future work, and required repairs/corrections (if any). The field report should also include results and comment from "in-progress" field adhesion testing of sealant previously installed.

B. Materials List:

1. List of materials proposed to be furnished and installed under this portion of the Work.
2. This shall in no way be construed as permitting substitution of materials for those specified.

C. Manufacturer's Information:

1. Installation Instructions: Submit special procedures for perimeter conditions requiring special attention.
2. Manufacturer's Certificate: Certify submitted products meet or exceed specified requirements.

1.04 QUALITY ASSURANCE

A. Qualifications: Not less than five (5) years successful experience with comparable projects and employing personnel that are skilled in specified work of this Section.

B. Regulatory Requirements: Properly dispose of all waste materials resulting from this work.

1.05 DELIVERY, STORAGE, AND HANDLING

A. Sealant materials are to be provided from one manufacturer to maintain consistent quality and color. Provide accessory materials recommended by the sealant manufacturer, pending approval by the Owner and Consultant, based on job-site adhesion testing.

B. Deliver and store materials on job site in a manner that prevents damage, contamination or breakage and with packages intact displaying labels identifying manufacturer, product name, and lot numbers when appropriate.

C. Store materials in accordance with manufacturer's recommendations. Comply with manufacturer's recommendations for minimum and maximum time and temperature limits for storage. Protect liquid components from freezing.

D. Store flammable materials in a cool dry, protected area away from sparks and open flames.

E. Materials shall be marked with the date of manufacture and shelf life. Do not use products beyond the expiration of their shelf life.

1.06 SITE CONDITIONS

A. Do not proceed with installation of joint sealants under the following conditions;

1. When ambient and substrate temperature conditions are outside limits permitted by joint-sealant manufacturer.
2. When joint substrates are wet.
3. Where joint widths are less or more than those allowed by joint-sealant manufacturer for applications specified.
4. Contaminants capable of interfering with adhesion have not yet been removed from joint substrates.

B. Do not proceed with installation of new sealants during threatening or unfavorable weather conditions. If sealant work cannot be performed, provide the necessary protection to keep building watertight.

PART 2 – PRODUCTS

2.01 MATERIALS

A. General: Listed are primary products and materials for the specified repair work. Provide all incidental items and materials required for completion of the work in accordance with these documents.

B. Sheet Metal

1. FS TT-S-00230C (2), single component, gun grade, non-sag urethane or polyether sealant.

   a. “Vulkem 116” by Mameco
   b. “Dynatrol I” by Pecora
   c. “Sonolastic NP 1” by Sonneborn
   d. “Dymonic” by Tremco
   e. “Sikaflex-1a” by Sika Corp.

C. Non-exposed compression sealant

1. TT-S-001657, Type I single component, low viscosity, self-wetting, butyl blend mastic.

   a. Butyl Sealant by Tremco, Inc.
   b. Water Block Seal by Firestone Building Products
   c. Water-Cut Off Mastic by Carlisle Syntec

PART 3 – EXECUTION

3.01 EXAMINATION

A. Examine existing conditions in the area of work and verify that no conditions are present that prevent or otherwise interfere with the installation of the specified work.

B. Adverse conditions are to be reported in writing within three calendar days upon identification. Absence of such notification will constitute the Contractor's acceptance of existing conditions.

C. Before ordering materials or performing work, obtain and verify all measurements at the project site. Exact measurements are the Contractor’s responsibility.

3.02 PREPARATION

A. General

1. Coordinate removal and new caulking efforts so that existing building joints do not remain open at the end of each workday.

B. Joint Cleaning:

1. Thoroughly clean joint surfaces which are to receive new sealant, removing all foreign matter, dust, oil, grease, water, surface dirt, old sealant and existing paint or primer.
2. Remove all loose particles, residual dust, or other foreign substances by blowing out joints with oil free compressed air prior to application of primer or sealant.
3. Clean metal surfaces by a solvent that leaves no residue, such as toluene or xylene. Use clean, white cloths or lint-free paper towels for cleaning with solvent and drying.
4. Mask areas adjacent to joints as required to protect adjacent surfaces.

3.03 INSTALLATION

A. General:

1. Comply with the manufacturer's requirements for correct sizing and installation of sealant with respect to anticipated joint movement and material temperatures.
2. Masking: Apply masking tape along joints in areas of high visibility or areas where the appearance of sealant on wall/glass surfaces is objectionable.
3. Joint Design:
   a. Sealant bead depth should be less than the joint width. Maintain a 2:1 ratio of joint width to sealant depth in accordance with the manufacturer’s requirements.
   b. For joint widths greater than 1-inch, submit installation recommendations from the manufacturer for approval by the Consultant.
4. Methods:
   a. Apply sealants using a cartridge-type caulking gun or bulk-loading gun, following the manufacturers written instructions.
   b. Apply sealants in a continuous operation to eliminate air voids throughout the entire joint cross-section.
5. Finishing:

   a. Tool or strike the sealant joint to a concave profile with a light pressure to spread the material against the back-up material and ensure adhesion to joint surfaces.
   b. Complete tooling in one continuous stroke within 10 minutes of sealant application and before skin forms. Perform dry tooling only. The use of soaps, oils, water and/or alcohols as tooling aids are not permitted.
   c. If masking materials are used, remove immediately after tooling the sealant.

3.04 FIELD QUALITY CONTROL

A. Make provision to assist and coordinate progress reviews of the work by the Consultant.

B. Field Adhesion Tests of Sealants: After work commences, perform sealant adhesion tests at representative locations as directed by the Consultant, using methods approved by the sealant manufacturer. Replace any sealant that fails to develop proper adhesion.

3.05 CLEANING

A. Remove excess sealant or other soiling due to caulking operations on adjacent surfaces as the work progresses.

B. On non-porous surfaces, remove excess sealant and clean with xylene or mineral spirits before the sealant cures.

C. On porous surfaces, allow excess sealant to cure and then remove by light abrasion or other mechanical means.

D. Leave finished work in neat, clean condition with no evidence of spills onto adjacent surfaces.

3.06 PROTECTION

A. Protect sealed joints from being disturbed for a minimum of 48 hours.

END OF SECTION

SECTION 15160

ROOF DRAINS

PART 1 – GENERAL

1.01 SUMMARY

A. Section Includes:

1. The installation of two (2) new drain inserts tied into existing plumbing for the drains at the south section on Roof Area E.
2. The installation of four (4) new drain inserts at the built-in cornice gutter drain lines.
3. Additional plumbing work shall be handled on a unit cost basis.

1.02 REFERENCES

A. Workmanship, apparatus, equipment, materials, and testing shall conform to the requirements of the latest specifications of:

1. American Society of Mechanical Engineers (ASME)
2. American National Standards Institute (ANSI)
3. American Society for Testing and Materials (ASTM)
4. Building Officials Code Administration (BOCA)
5. International Conference of Building Officials (ICBO Uniform Codes)

1.03 SYSTEM DESCRIPTION

A. Install piping so as to occupy a minimum of space. Install parallel and close to walls, ceiling, columns or other members providing proper space for covering or removal of pipes.

1.04 SUBMITTALS

A. Submit Shop Drawings and Catalog Sheets in accordance with the requirements of this Specification, and as herein specified before ordering materials or equipment for the following:

1. Roof drains
2. Cleanouts
3. Plumbing line layout
4. Plumbing line supports
5. Pipes

B. Substitutions

1. Products are referenced in this specification to establish a standard of quality, style, design and function of materials, equipment, apparatus or product.
2. Submit substitutions in accordance with the General Conditions of this Specification.
3. This Contractor assumes all engineering and construction cost necessary for revision in the Work of other trades due to the substitute material or equipment.

1.05 PROJECT/SITE CONDITIONS

A. Contractor is responsible for dimensions in the field and verifying ceiling heights or other architectural and structural details before installing any piping.

B. Notify the Owner and Consultant in writing of any difference which may be found before proceeding with the Work.

1.06 QUALITY ASSURANCE

A. Test the storm drain system under normal conditions of use per the requirements of the authorities having jurisdiction.

PART 2 – PRODUCTS

2.01 DRAIN INSERTS

A. U-Flow Drain Insert as manufactured by Olympic Manufacturing Group.

B. Fast-Flow retro-fit drain insert by Marathon Roofing Products.

2.02 ACCESSORIES

A. Solvent Cement: ASTM D2564.

B. Supports and Hangers: 14 galvanized steel, 12 inches long, 180 degree arc, 3/4 inch bearing surface.

C. Insulation: Preformed Owens-Corning Fiberglas #25 ASJ, one inch thick, to fit piping. Provide mitered sections of same material with jointing tape to cover fittings. Provide integral vapor barrier with Zeston fittings as manufactured by Owens Corning, or approved equal. At the Contractor's option, insulation may be a complete system of closed cell polyurethane installed per the manufacturer's recommendation. Smoke and flame spread shall conform to code.

PART 3 – EXECUTION

3.01 INSTALLATION - GENERAL

A. Coordination

1. Install all new drains, receivers, clamps, and miscellaneous supports at locations determined by the Owner's field representative. Connect drains immediately to new piping.
2. When installing new drains, carefully coordinate the cutting of the deck, insulation, and membrane roofing with the Owner's field representative.
3. Any plastic and/or pvc components, excluding drain body, shall be replaced with new cast-iron components.

B. Preparation

1. All bituminous residues shall be removed from inside of existing drain bowls at the clamping ring seat.
2. Remove flashing collar and clean. If broken, provide new collar.
3. All broken or damaged drain components shall be replaced.

3.02 INSTALLATION - DRAINS

A. Install the roof drain clamping ring and all clamping bolts. Tighten the clamping bolts to achieve constant compression. Install drain strainer/domes.

3.03 FIELD QUALITY CONTROL

A. The building is to remain absolutely watertight during installation of new drains. The deck and membrane is not to be cut if any ponded water exists on roof surface.

B. Contractor shall not damage any interior or exterior finishes, including floors, ceilings, and walls.

C. Restore all surfaces damaged by the operations of this section to "like new" condition, at no additional cost to the Owner.

D. Verification:

1. Upon completion of the installation of each drain and attached piping, visually inspect and verify that all components are complete and properly installed.
2. Verify that all new drains and piping are securely attached to the building structure, are in working order, and are absolutely watertight.

3.04 CLEANING

A. At completion of all plumbing work, remove all construction debris and equipment from job site. Contractor is to ensure that all building components (ceilings, lights, etc.) are undamaged and properly in place.

END OF SECTION

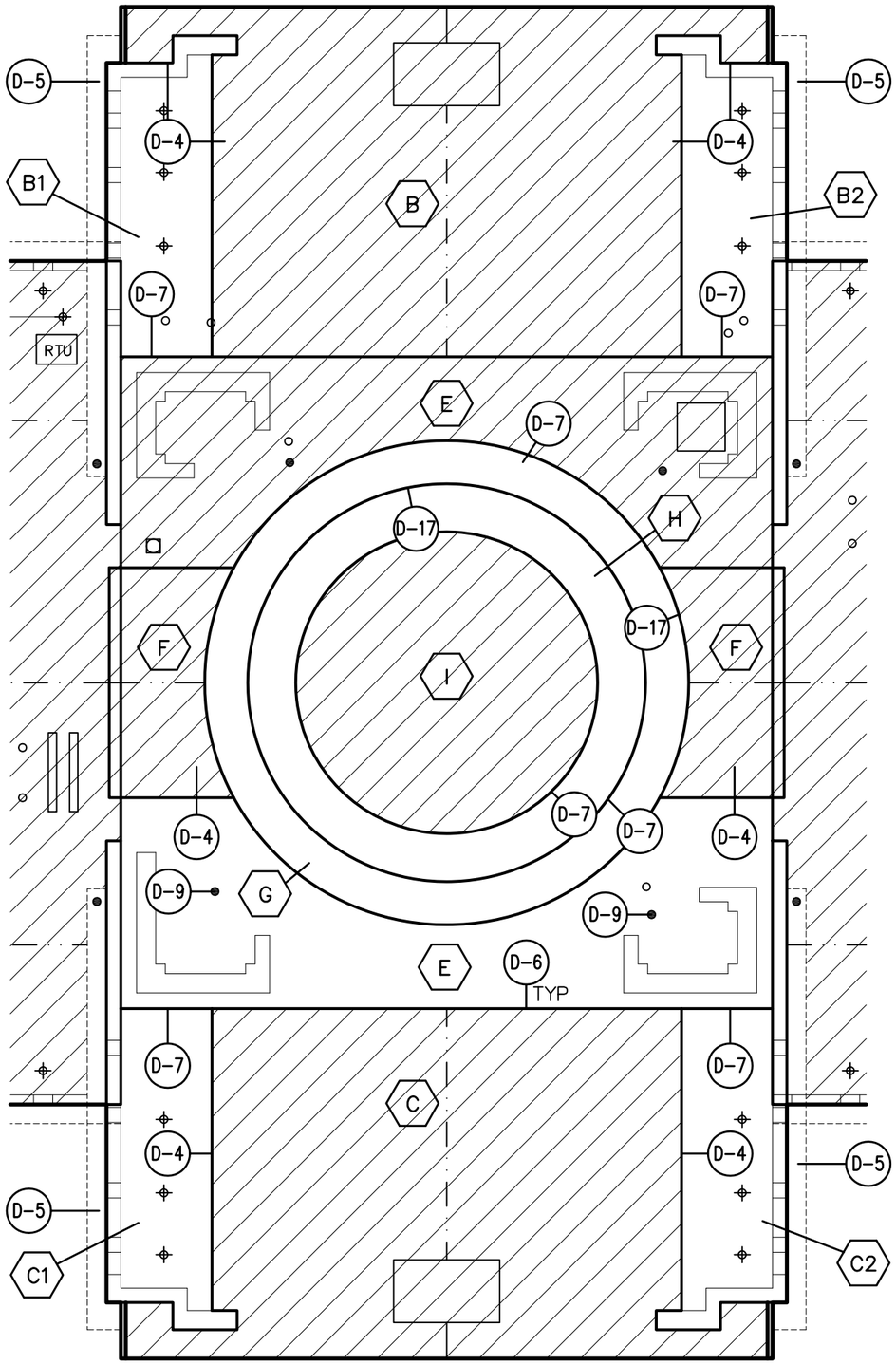

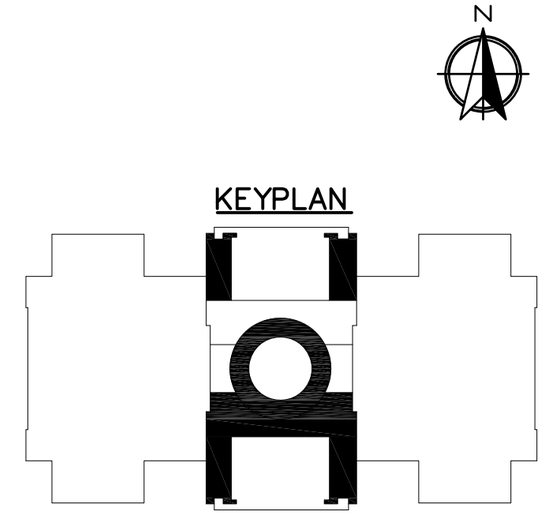

GENERAL NOTES:

1. PERFORM ROOF REPLACEMENT IN CONFORMANCE WITH WRITTEN SPECIFICATIONS IN THE PROJECT MANUAL.
2. DRAWING AND DETAILS ARE PROVIDED FOR GENERAL ILLUSTRATION OF TYPICAL BUILDING CONDITIONS ONLY.
3. CONTRACTOR IS REQUIRED TO VERIFY ALL CONDITIONS, DIMENSIONS, AND DETERMINE QUANTITIES FOR SPECIFIED WORK PRIOR TO SUBMITTING A BID.

StructureTec. STANDARD KEY OF SYMBOLS

X	AREA DESIGNATION		ROOF EDGE
	SLOPE TRANSITION		ROUND HOOD EXHAUST FAN
	ROOF DRAIN		EQUIPMENT CURB
	SOIL PIPE		SLEEPERS
	PIPE PROJECTION	X	DETAIL REFERENCE
RTU	ROOF TOP UNIT		NOT IN CONTRACT

StructureTec.
Total Building Envelope Management Solution SM
4777 Campus Drive • Kalamazoo, MI 49008
1121 Lake Cook Road, Ste C • Deerfield, IL 60015
473 Airport Road, Ste 1 • Butler, PA 16002
34119 W. Twelve Mile Road, Ste 270 • Farmington Hills, MI 48331

ROOF REPLACEMENT PLAN

2014 ROOF REPLACEMENT
LUCAS COUNTY COURTHOUSE
TOLEDO, OHIO

REVISIONS / ADDENDA:	
ADDENDUM #1 08-05-2014	
SCALE:	N.T.S.
APPROVED BY:	R.A.F.
DRAWN BY:	A.T.R.
DATE:	NOVEMBER 2014
PROJECT NUMBER:	T14084.RFG3
DRAWING NUMBER:	RP-1

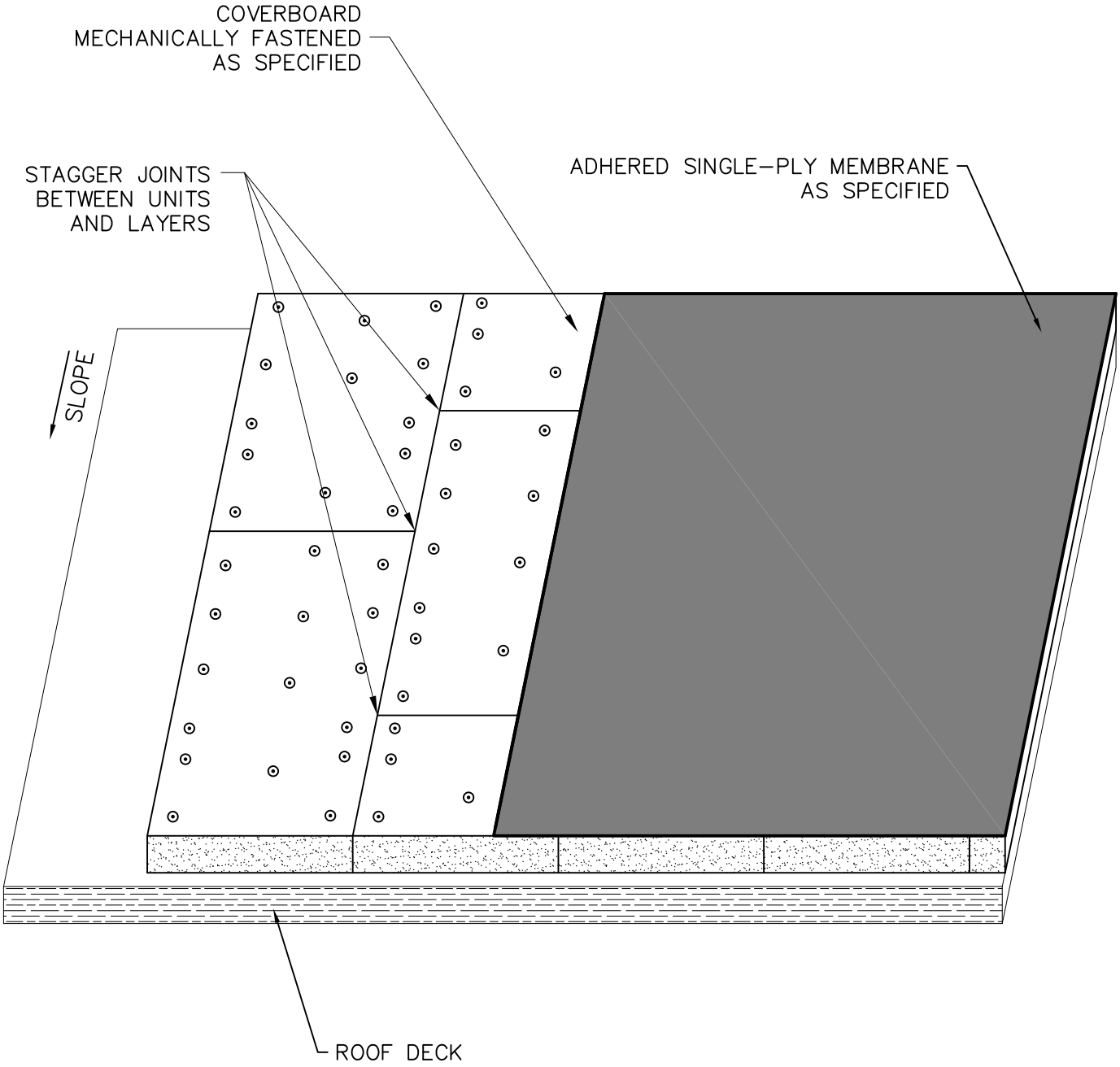

StructureTec®
Total Building Envelope Management Solution℠
4777 Campus Drive • Kalamazoo, MI 49008
Lake Cook Road, Ste C • Deerfield, IL 60015
473 Airport Road, Ste 1 • Butler, PA 16002
34119 W. Twelve Mile Road, Ste 270 • Farmington Hills, MI 48331

CONSTRUCTION PROFILE – WOOD DECK, SINGLE LAYER OF COVERBOARD AND FULLY ADHERED SINGLE-PLY ROOFING

2014 ROOF REPLACEMENT
LUCAS COUNTY COURTHOUSE
TOLEDO, OHIO

SCALE:	N.T.S.
APPROVED BY:	R.A.F.
DRAWN BY:	A.T.R.
DATE:	NOVEMBER 2014
PROJECT #:	T14084.RFG3
	D-1

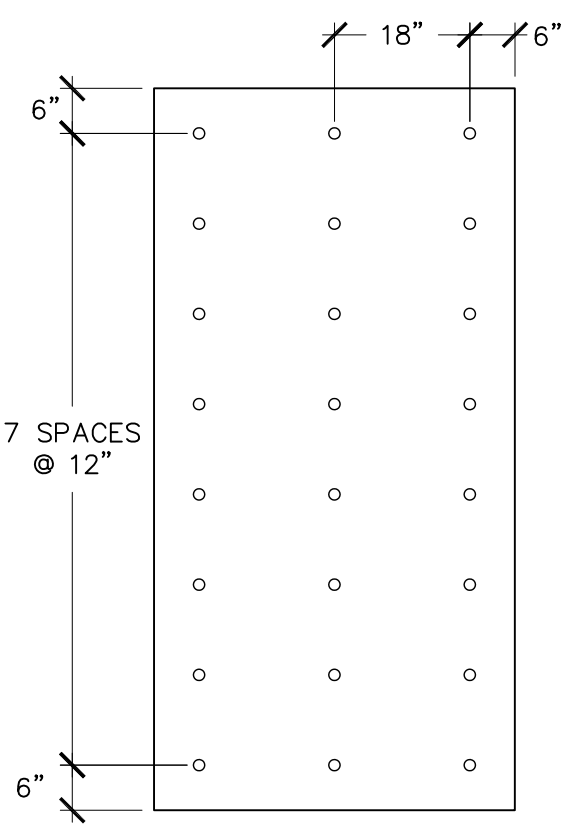

PERIMETERS – 4'X8'

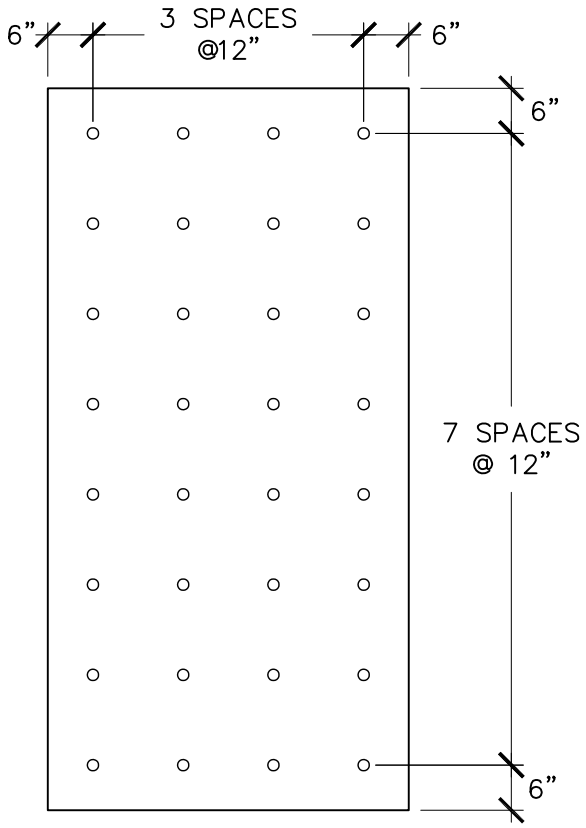

CORNERS – 4'X8'

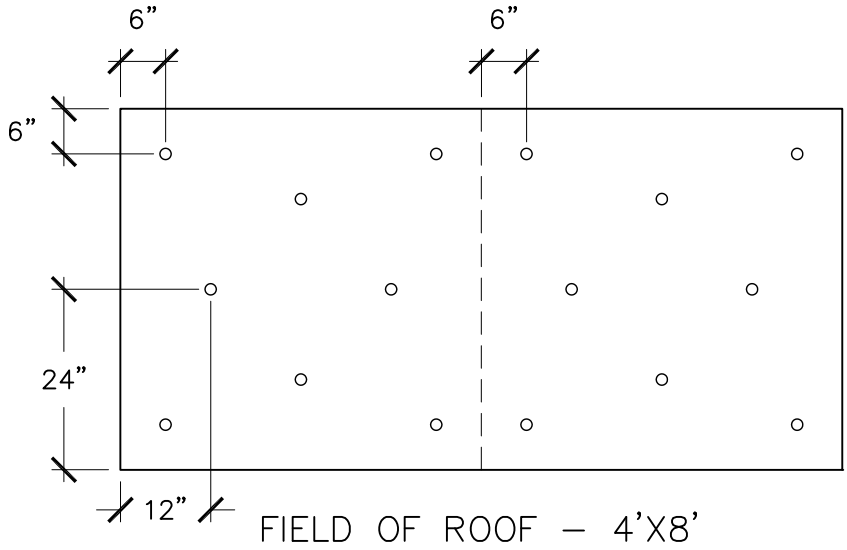

FIELD OF ROOF – 4'X8'

NOTE: REFER TO SECTION 7220 – ROOF AND DECK INSULATION FOR PERIMETER AND CORNER AREA DIMENSIONS

StructureTec®
Total Building Envelope Management Solution℠
4777 Campus Drive • Kalamazoo, MI 49008
Lake Cook Road, Ste C • Deerfield, IL 60015
473 Airport Road, Ste 1 • Butler, PA 16002
34119 W. Twelve Mile Road, Ste 270 • Farmington Hills, MI 48331

SECUREMENT: COVER BOARD FASTENER PATTERN

2014 ROOF REPLACEMENT
LUCAS COUNTY COURTHOUSE
TOLEDO, OHIO

SCALE:	N.T.S.
APPROVED BY:	R.A.F.
DRAWN BY:	A.T.R.
DATE:	NOVEMBER 2014
PROJECT #:	T14084.RFG3
	D–2

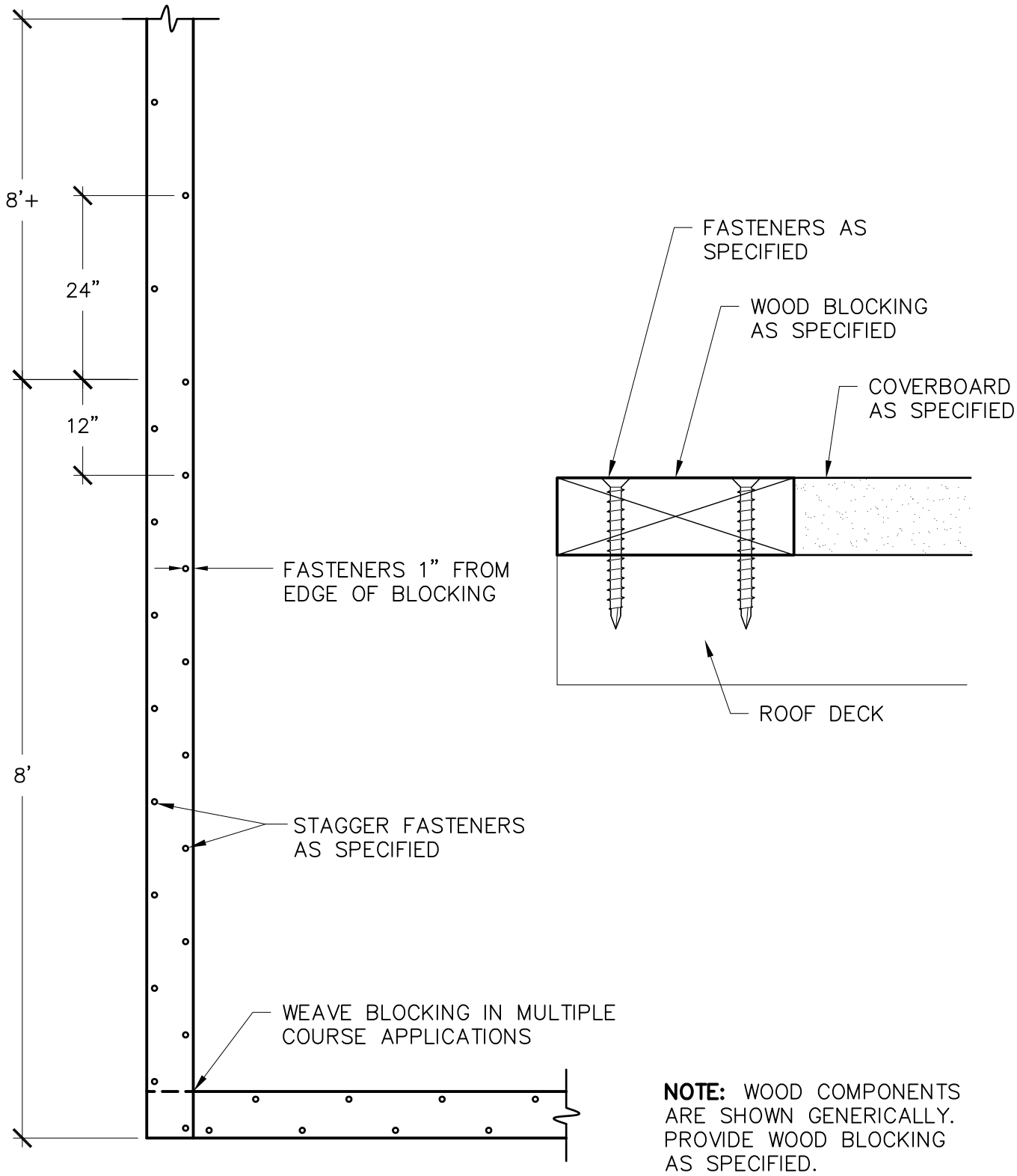

NOTE: WOOD COMPONENTS ARE SHOWN GENERICALLY. PROVIDE WOOD BLOCKING AS SPECIFIED.

StructureTec®
Total Building Envelope Management Solution℠
4777 Campus Drive • Kalamazoo, MI 49008
Lake Cook Road, Ste C • Deerfield, IL 60015
473 Airport Road, Ste 1 • Butler, PA 16002
34119 W. Twelve Mile Road, Ste 270 • Farmington Hills, MI 48331

WOOD BLOCK FASTENING PATTERN

2014 ROOF REPLACEMENT
LUCAS COUNTY COURTHOUSE
TOLEDO, OHIO

SCALE:	N.T.S.
APPROVED BY:	R.A.F.
DRAWN BY:	A.T.R.
DATE:	NOVEMBER 2014
PROJECT #:	T14084.RFG3
	D–3

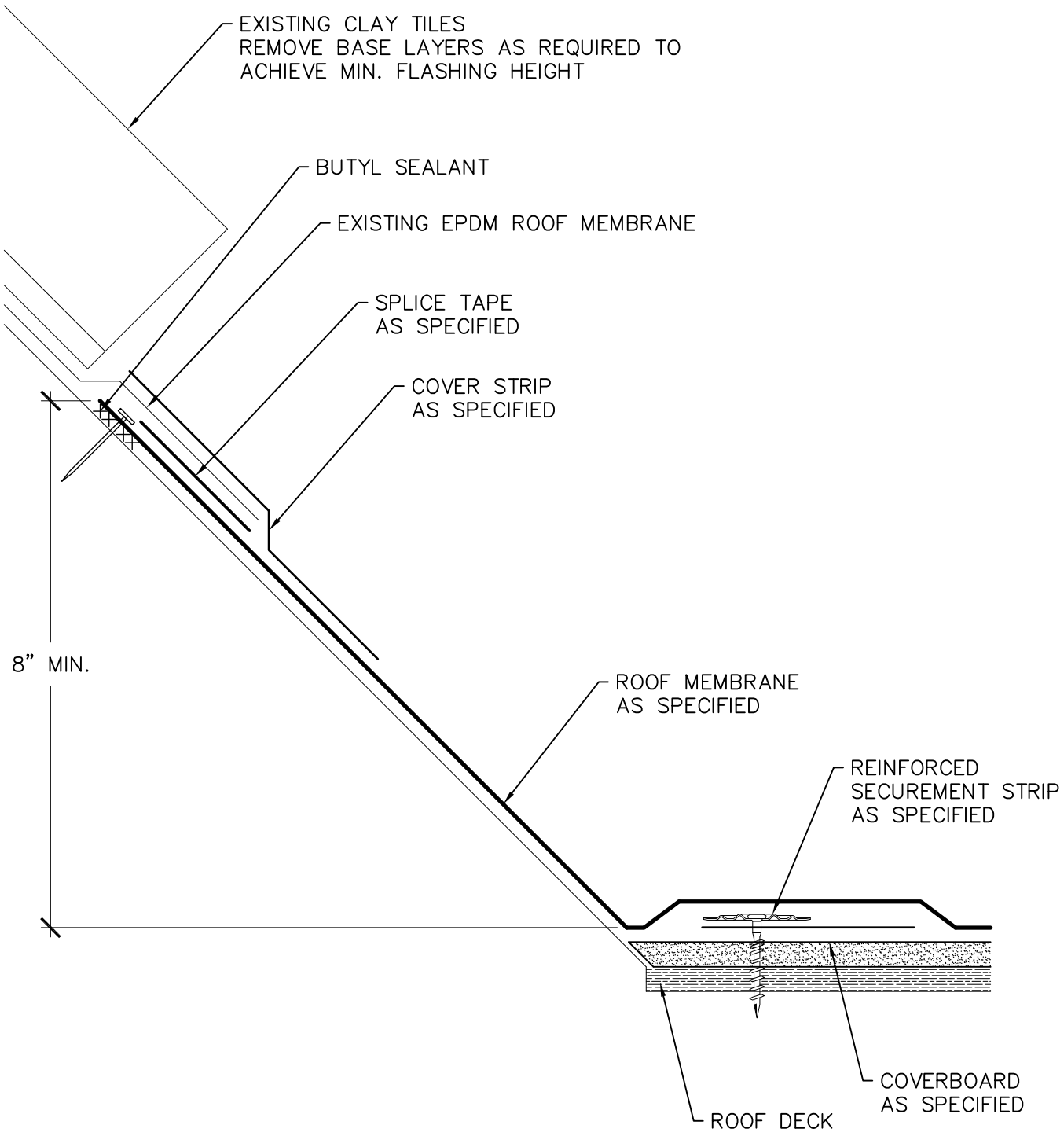

StructureTec®
Total Building Envelope Management Solution℠
4777 Campus Drive • Kalamazoo, MI 49008
Lake Cook Road, Ste C • Deerfield, IL 60015
473 Airport Road, Ste 1 • Butler, PA 16002
34119 W. Twelve Mile Road, Ste 270 • Farmington Hills, MI 48331

MEMBRANE TERMINATION AT SLOPED TILE ROOF

2014 ROOF REPLACEMENT
LUCAS COUNTY COURTHOUSE
TOLEDO, OHIO

SCALE:	N.T.S.
APPROVED BY:	R.A.F.
DRAWN BY:	A.T.R.
DATE:	NOVEMBER 2014
PROJECT #:	T14084.RFG3
	D–4

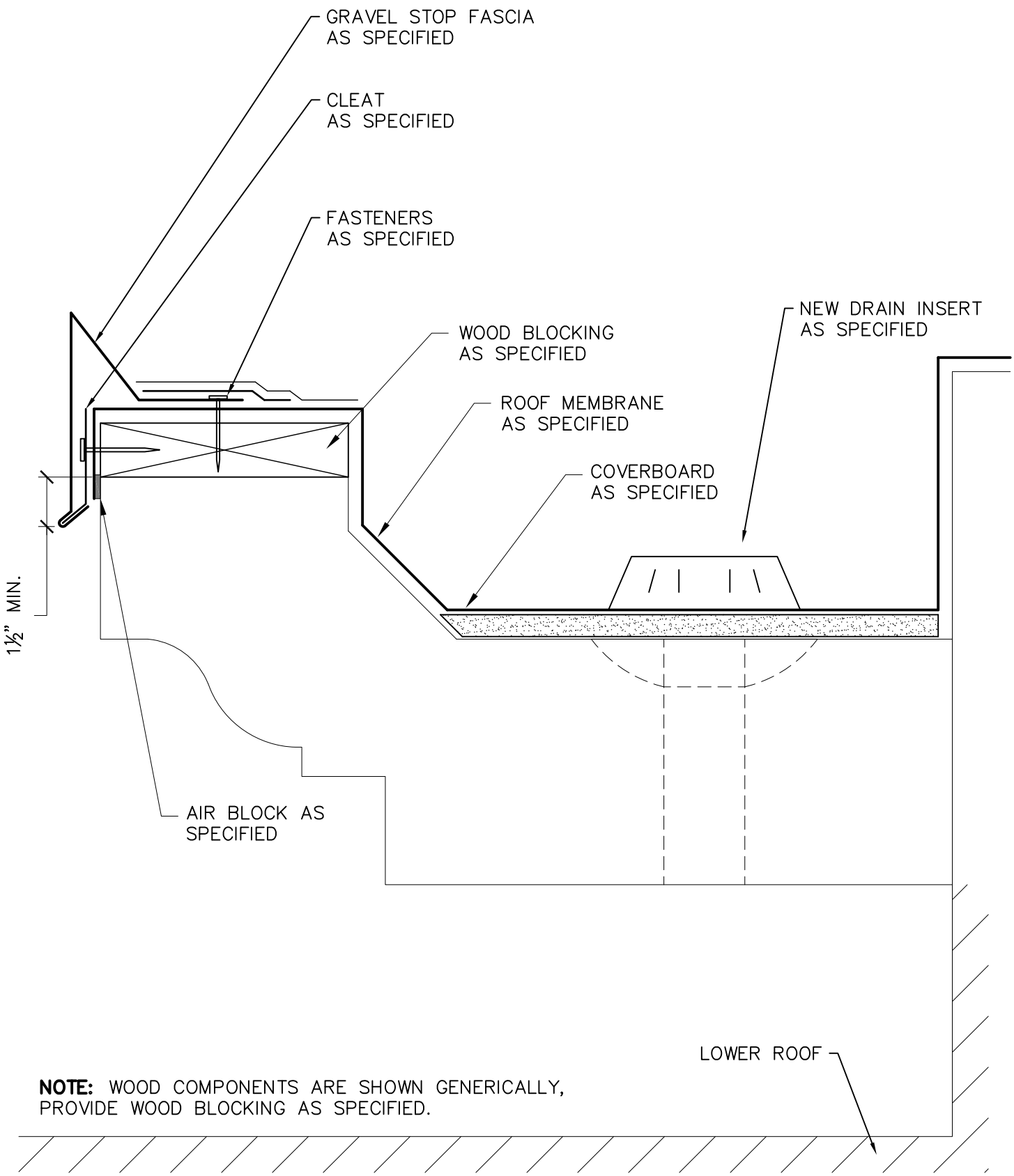

NOTE: WOOD COMPONENTS ARE SHOWN GENERICALLY, PROVIDE WOOD BLOCKING AS SPECIFIED.

StructureTec®
Total Building Envelope Management Solution℠
4777 Campus Drive • Kalamazoo, MI 49008
Lake Cook Road, Ste C • Deerfield, IL 60015
473 Airport Road, Ste 1 • Butler, PA 16002
34119 W. Twelve Mile Road, Ste 270 • Farmington Hills, MI 48331

GRAVEL STOP FASCIA SYSTEM AND DRAIN DETAIL

2014 ROOF REPLACEMENT
LUCAS COUNTY COURTHOUSE
TOLEDO, OHIO

SCALE:	N.T.S.
APPROVED BY:	R.A.F.
DRAWN BY:	A.T.R.
DATE:	NOVEMBER 2014
PROJECT #:	T14084.RFG3

D–5

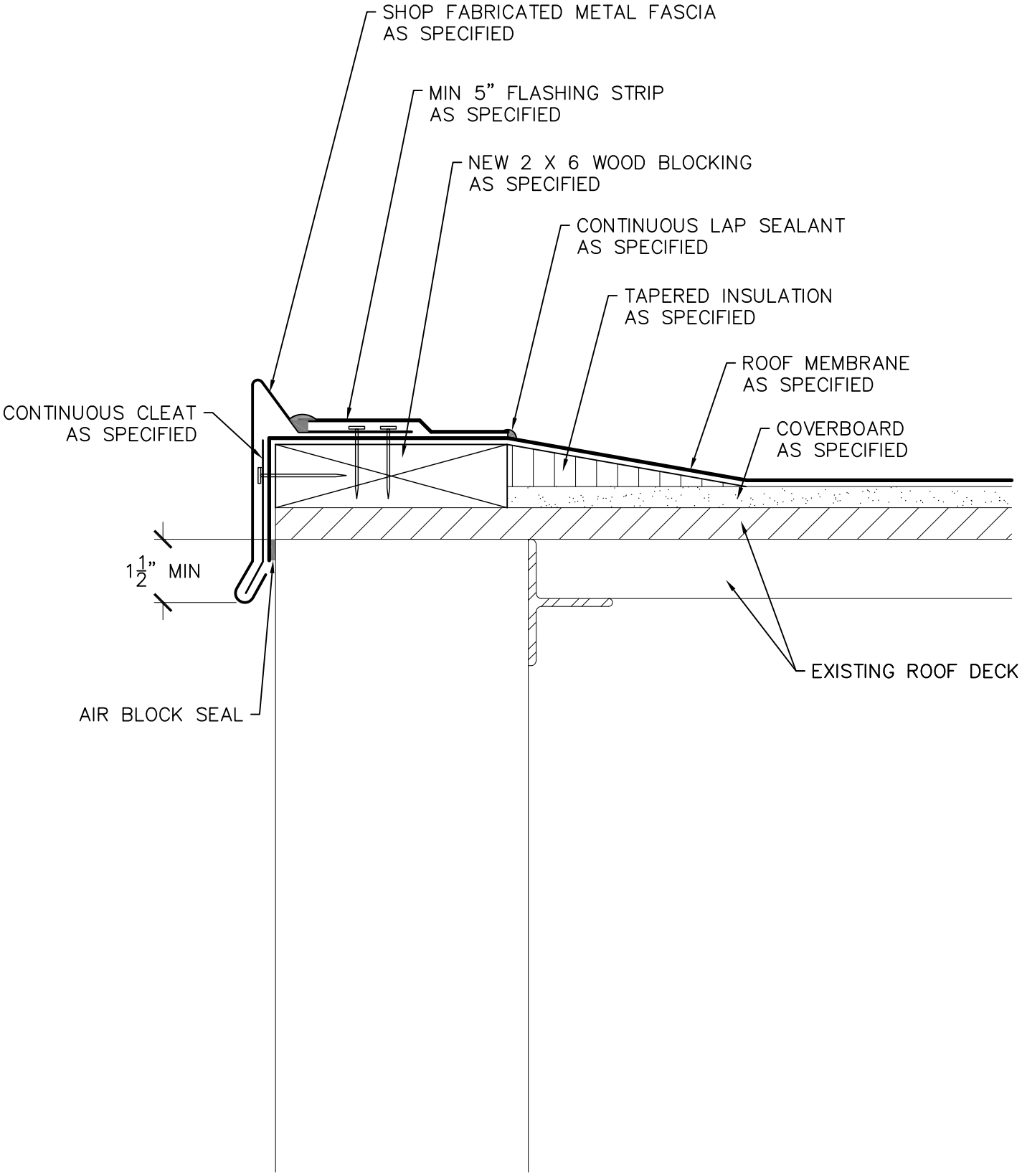

ADDENDUM #1 08–05–14

StructureTec®
Total Building Envelope Management Solution℠
4777 Campus Drive • Kalamazoo, MI 49008
Lake Cook Road, Ste C • Deerfield, IL 60015
473 Airport Road, Ste 1 • Butler, PA 16002
34119 W. Twelve Mile Road, Ste 270 • Farmington Hills, MI 48331

GRAVEL STOP FASCIA

2014 ROOF REPLACEMENT
LUCAS COUNTY COURTHOUSE
TOLEDO, OHIO

SCALE:	N.T.S.
APPROVED BY:	R.A.F.
DRAWN BY:	A.T.R.
DATE:	AUGUST 2014
PROJECT #:	T14084.RFG3
	D–6

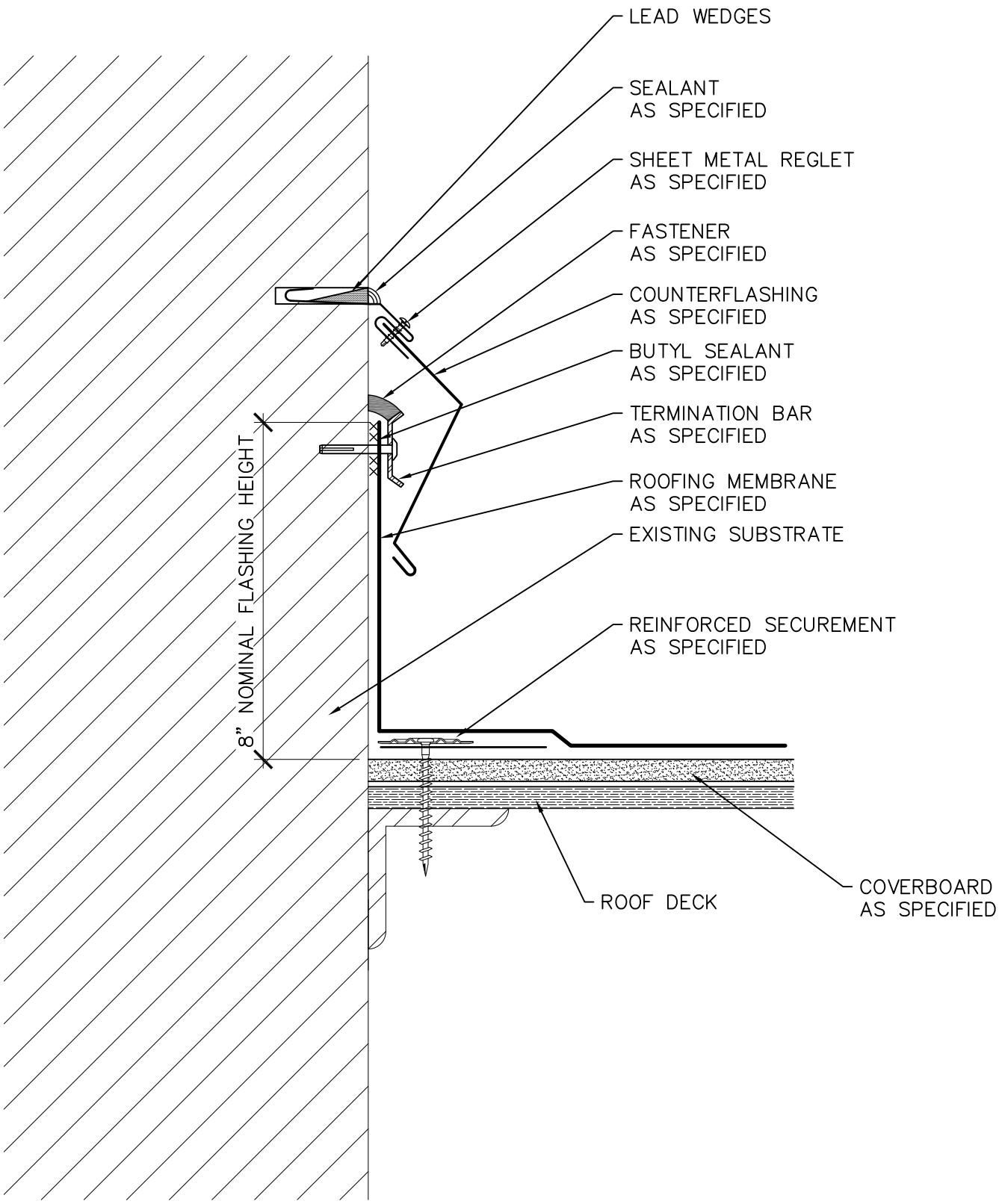

StructureTec®
Total Building Envelope Management Solution℠
4777 Campus Drive • Kalamazoo, MI 49008
Lake Cook Road, Ste C • Deerfield, IL 60015
473 Airport Road, Ste 1 • Butler, PA 16002
34119 W. Twelve Mile Road, Ste 270 • Farmington Hills, MI 48331

TWO–PIECE REGLET COUNTERFLASHING

2014 ROOF REPLACEMENT
LUCAS COUNTY COURTHOUSE
TOLEDO, OHIO

SCALE:	N.T.S.
APPROVED BY:	R.A.F.
DRAWN BY:	A.T.R.
DATE:	NOVEMBER 2014
PROJECT #:	T14084.RFG3
	D–7

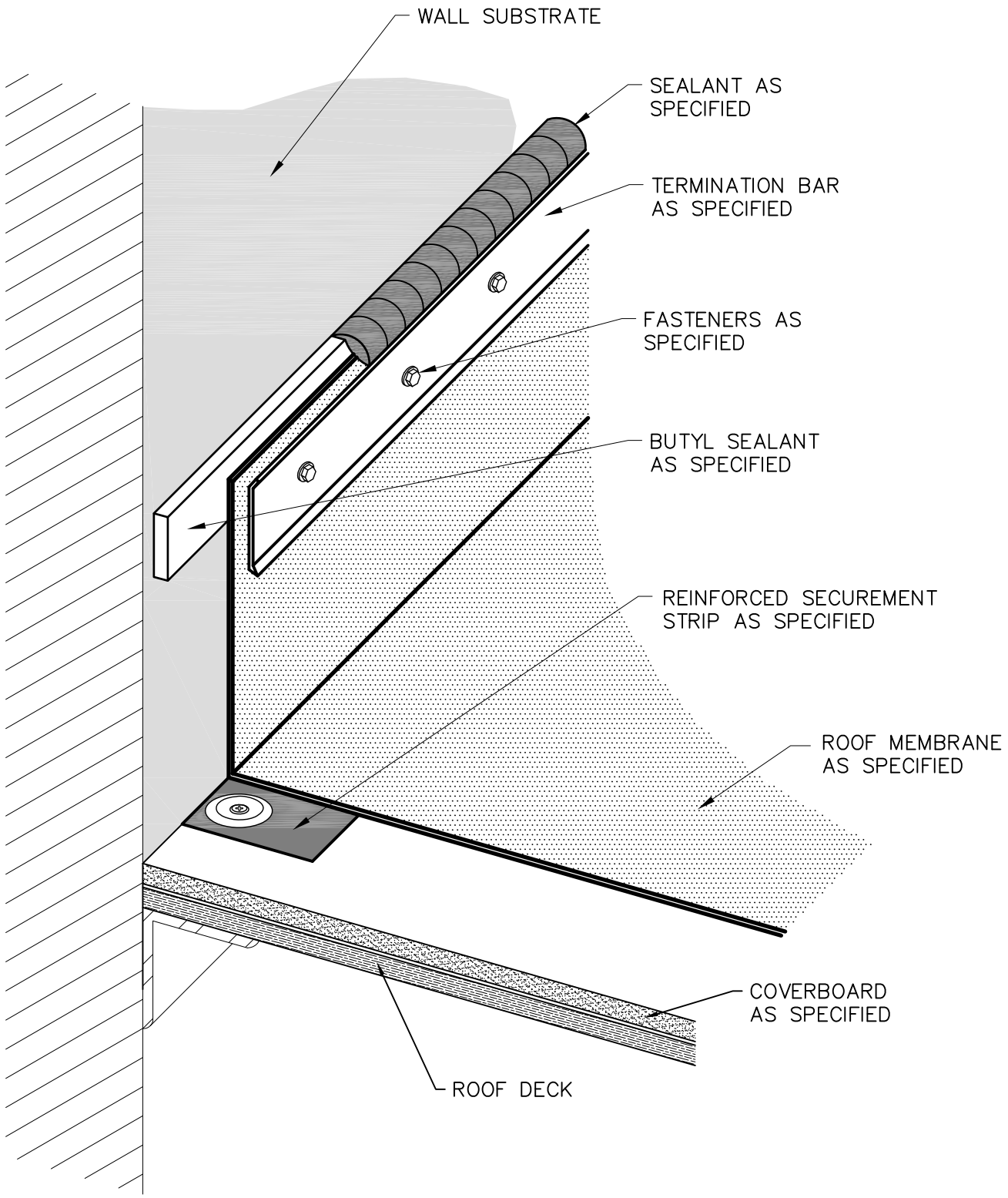

NOTE:
TERMINATION BAR TO BE PROVIDED AT ALL HORIZONTAL AND VERTICAL MEMBRANE TERMINATION POINTS.

StructureTec®
Total Building Envelope Management Solution℠
4777 Campus Drive • Kalamazoo, MI 49008
Lake Cook Road, Ste C • Deerfield, IL 60015
473 Airport Road, Ste 1 • Butler, PA 16002
34119 W. Twelve Mile Road, Ste 270 • Farmington Hills, MI 48331

TERMINATION BAR DETAIL

2014 ROOF REPLACEMENT
LUCAS COUNTY COURTHOUSE
TOLEDO, OHIO

SCALE:	N.T.S.
APPROVED BY:	R.A.F.
DRAWN BY:	A.T.R.
DATE:	NOVEMBER 2014
PROJECT #:	T14084.RFG3
	D–8

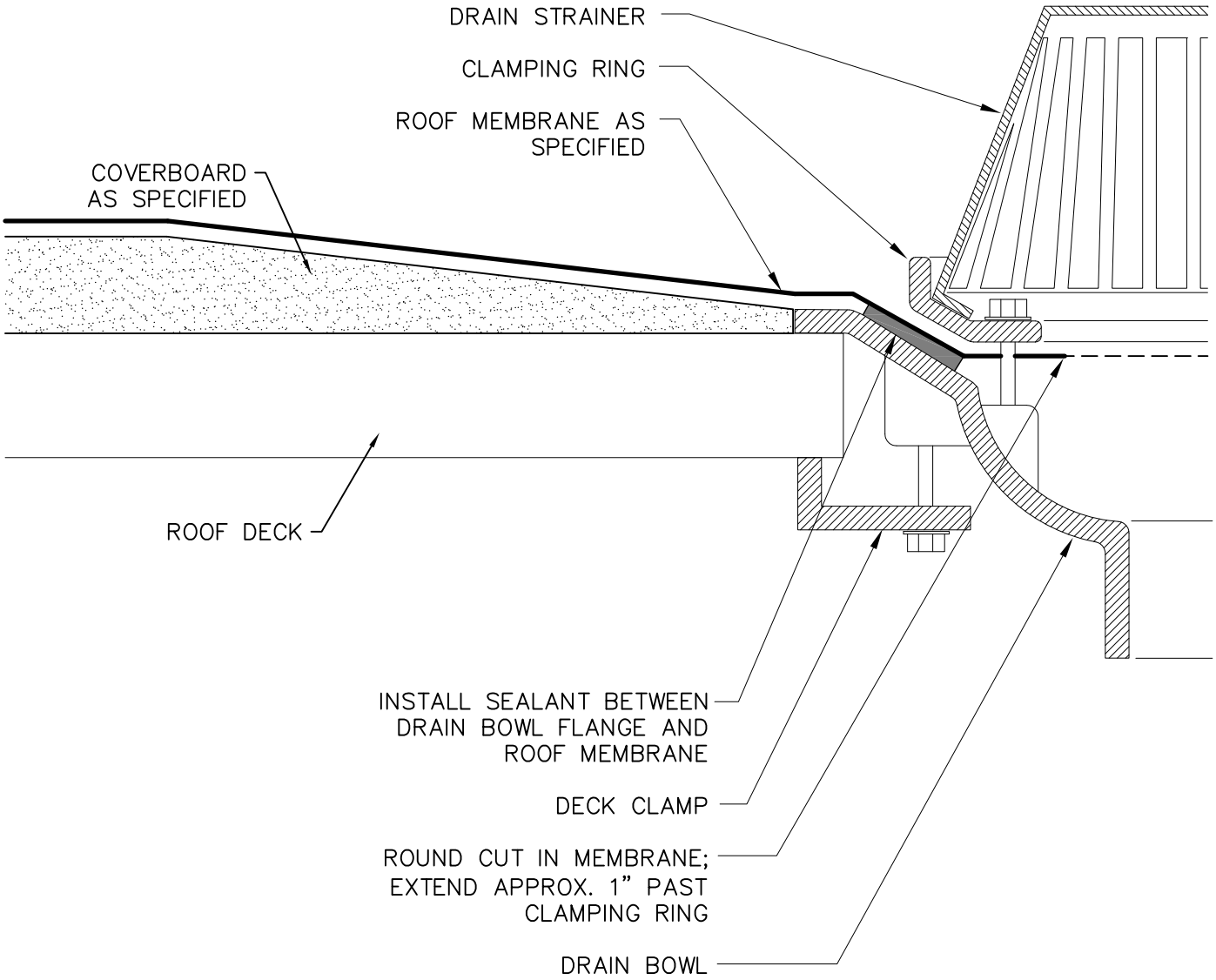

StructureTec®
Total Building Envelope Management Solution℠
4777 Campus Drive • Kalamazoo, MI 49008
Lake Cook Road, Ste C • Deerfleld, IL 60015
473 Airport Road, Ste 1 • Butler, PA 16002
34119 W. Twelve Mile Road, Ste 270 • Farmington Hills, MI 48331

ROOF DRAIN

2014 ROOF REPLACEMENT
LUCAS COUNTY COURTHOUSE
TOLEDO, OHIO

SCALE:	N.T.S.
APPROVED BY:	R.A.F.
DRAWN BY:	A.T.R.
DATE:	NOVEMBER 2014
PROJECT #:	T14084.RFG3

D–9

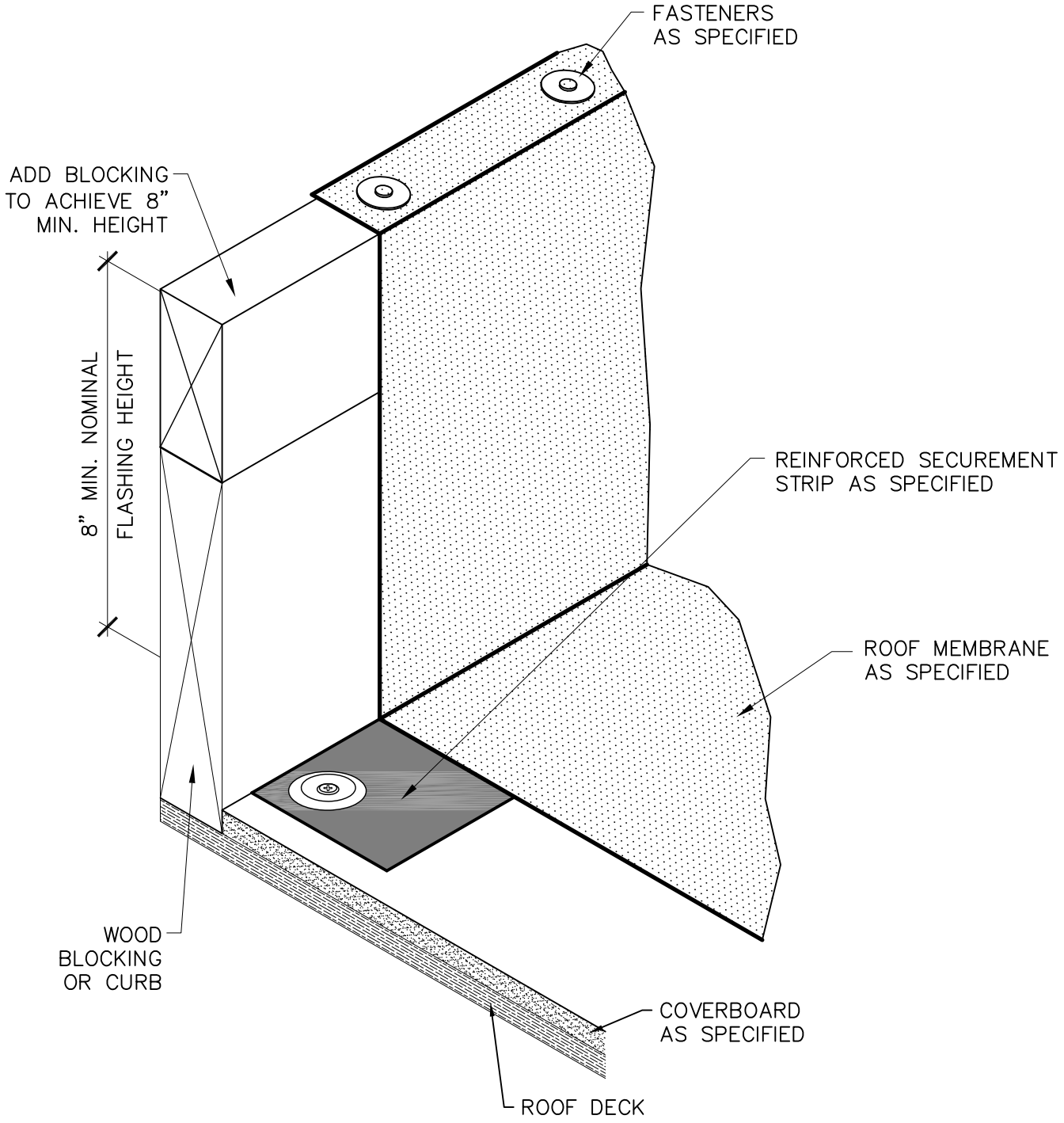

NOTE: WOOD COMPONENTS ARE SHOWN GENERICALLY, PROVIDE WOOD BLOCKING AS SPECIFIED.

StructureTec®
Total Building Envelope Management Solution℠
4777 Campus Drive • Kalamazoo, MI 49008
Lake Cook Road, Ste C • Deerfield, IL 60015
473 Airport Road, Ste 1 • Butler, PA 16002
34119 W. Twelve Mile Road, Ste 270 • Farmington Hills, MI 48331

CURB WITH REMOVABLE CAP

2014 ROOF REPLACEMENT
LUCAS COUNTY COURTHOUSE
TOLEDO, OHIO

SCALE:	N.T.S.
APPROVED BY:	R.A.F.
DRAWN BY:	A.T.R.
DATE:	NOVEMBER 2014
PROJECT #:	T14084.RFG3
	D–10

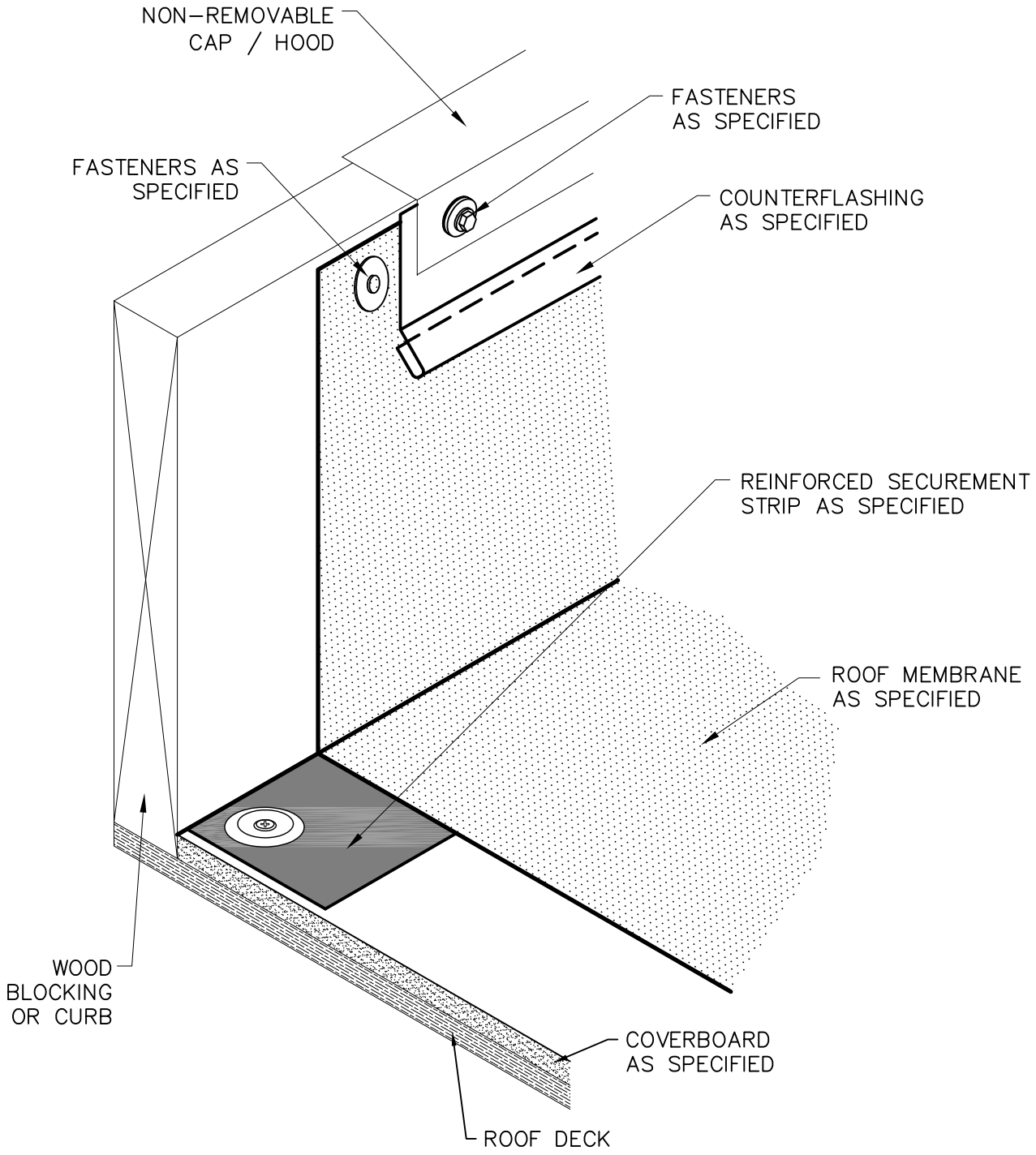

NOTE: WOOD COMPONENTS ARE SHOWN GENERICALLY, PROVIDE WOOD BLOCKING AS SPECIFIED.

StructureTec®
Total Building Envelope Management Solution℠
4777 Campus Drive • Kalamazoo, MI 49008
Lake Cook Road, Ste C • Deerfield, IL 60015
473 Airport Road, Ste 1 • Butler, PA 16002
34119 W. Twelve Mile Road, Ste 270 • Farmington Hills, MI 48331

CURB WITH NON–REMOVABLE CAP

2014 ROOF REPLACEMENT
LUCAS COUNTY COURTHOUSE
TOLEDO, OHIO

SCALE:	N.T.S.
APPROVED BY:	R.A.F.
DRAWN BY:	A.T.R.
DATE:	NOVEMBER 2014
PROJECT #:	T14084.RFG3
	D–11

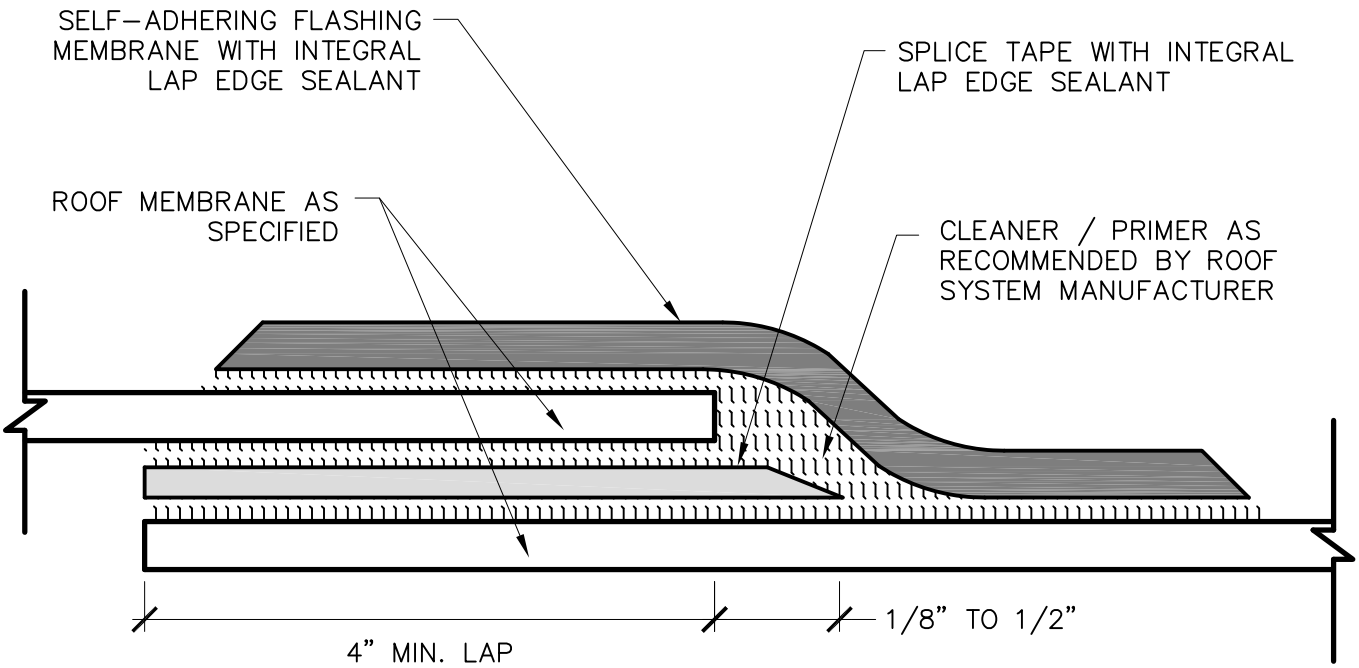

NOTE:
LAP SEALANT APPLIED TO FLASHING LAPS, END LAPS, PATCHES, AND T-JOINTS AS REQUIRED BY ROOF SYSTEM MANUFACTURER.

StructureTec®
Total Building Envelope Management Solution℠
4777 Campus Drive • Kalamazoo, MI 49008
Lake Cook Road, Ste C • Deerfield, IL 60015
473 Airport Road, Ste 1 • Butler, PA 16002
34119 W. Twelve Mile Road, Ste 270 • Farmington Hills, MI 48331

SEAM CROSS SECTION W/ COVER STRIP

2014 ROOF REPLACEMENT
LUCAS COUNTY COURTHOUSE
TOLEDO, OHIO

SCALE:	N.T.S.
APPROVED BY:	R.A.F.
DRAWN BY:	A.T.R.
DATE:	NOVEMBER 2014
PROJECT #:	T14084.RFG3
	D-12

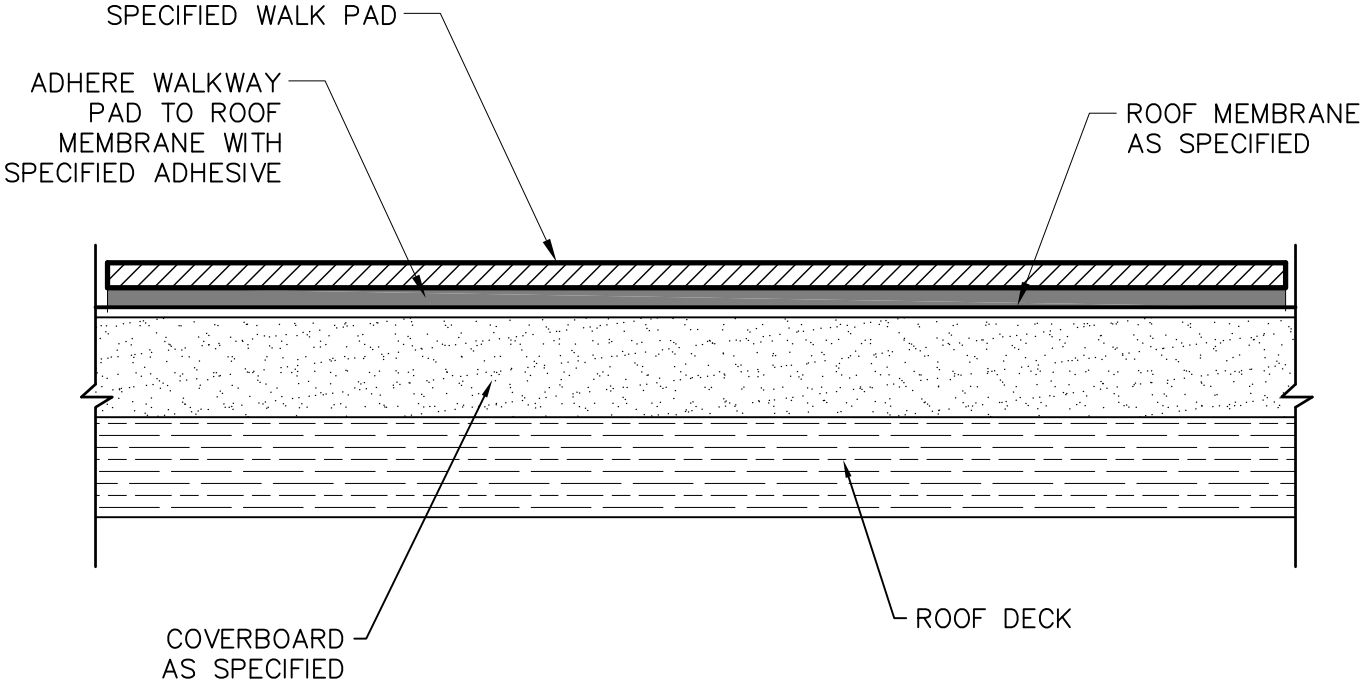

StructureTec®
Total Building Envelope Management Solution℠
4777 Campus Drive • Kalamazoo, MI 49008
Lake Cook Road, Ste C • Deerfield, IL 60015
473 Airport Road, Ste 1 • Butler, PA 16002
34119 W. Twelve Mile Road, Ste 270 • Farmington Hills, MI 48331

WALKWAY PAD INSTALLATION

2014 ROOF REPLACEMENT
LUCAS COUNTY COURTHOUSE
TOLEDO, OHIO

SCALE:	N.T.S.
APPROVED BY:	R.A.F.
DRAWN BY:	A.T.R.
DATE:	NOVEMBER 2014
PROJECT #:	T14084.RFG3
	D–13

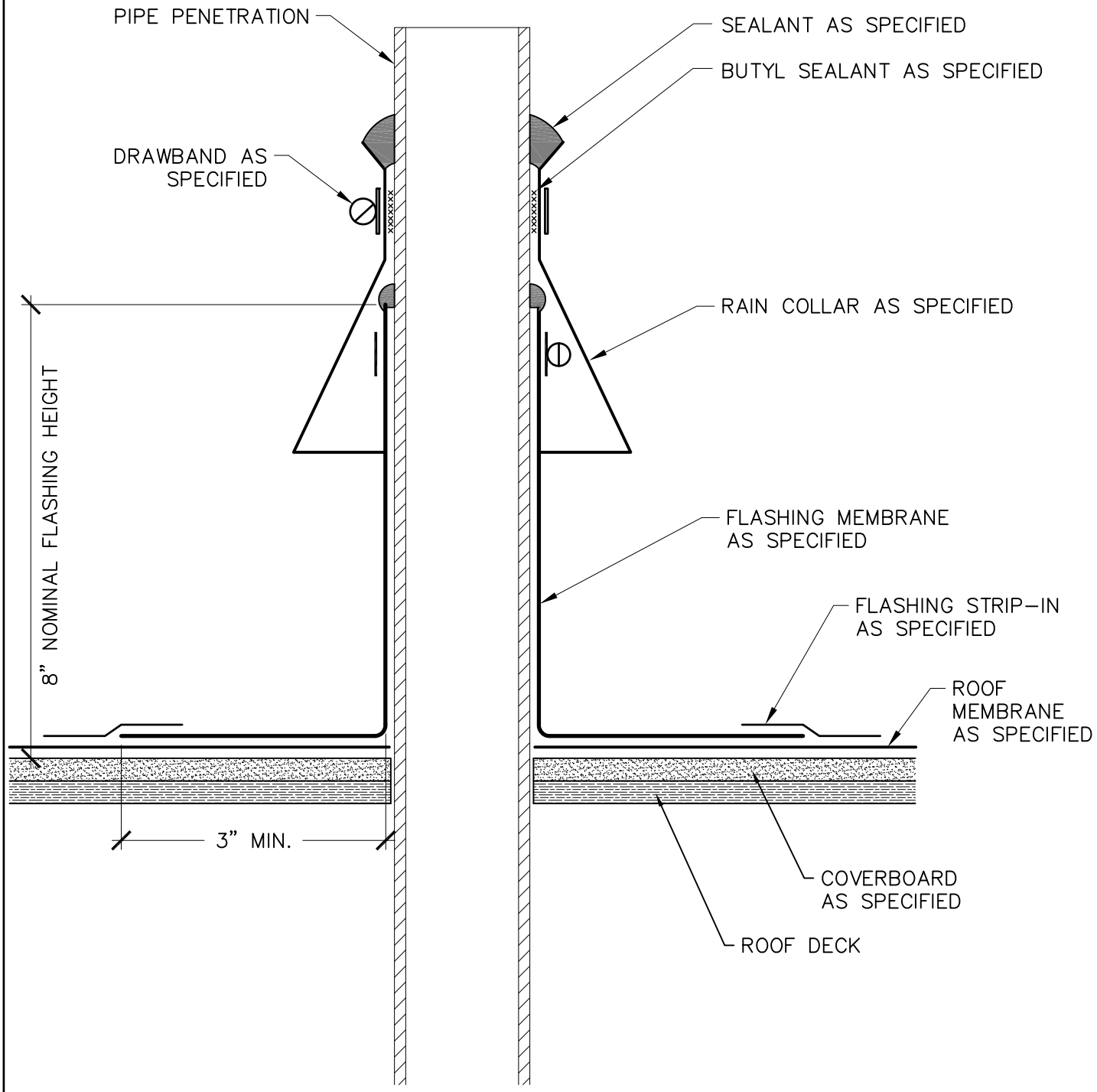

NOTE:
RAIN COLLARS NOT REQUIRED AT SCREENS WALL SUPPORTS OR STONE COLUMNS.

StructureTec®
Total Building Envelope Management Solution℠
4777 Campus Drive • Kalamazoo, MI 49008
Lake Cook Road, Ste C • Deerfield, IL 60015
473 Airport Road, Ste 1 • Butler, PA 16002
34119 W. Twelve Mile Road, Ste 270 • Farmington Hills, MI 48331

FIELD FABRICATED
SINGLE-PLY
PENETRATION FLASHING

2014 ROOF REPLACEMENT
LUCAS COUNTY COURTHOUSE
TOLEDO, OHIO

SCALE:	N.T.S.
APPROVED BY:	R.A.F.
DRAWN BY:	A.T.R.
DATE:	NOVEMBER 2014
PROJECT #:	T14084.RFG3
	D-14

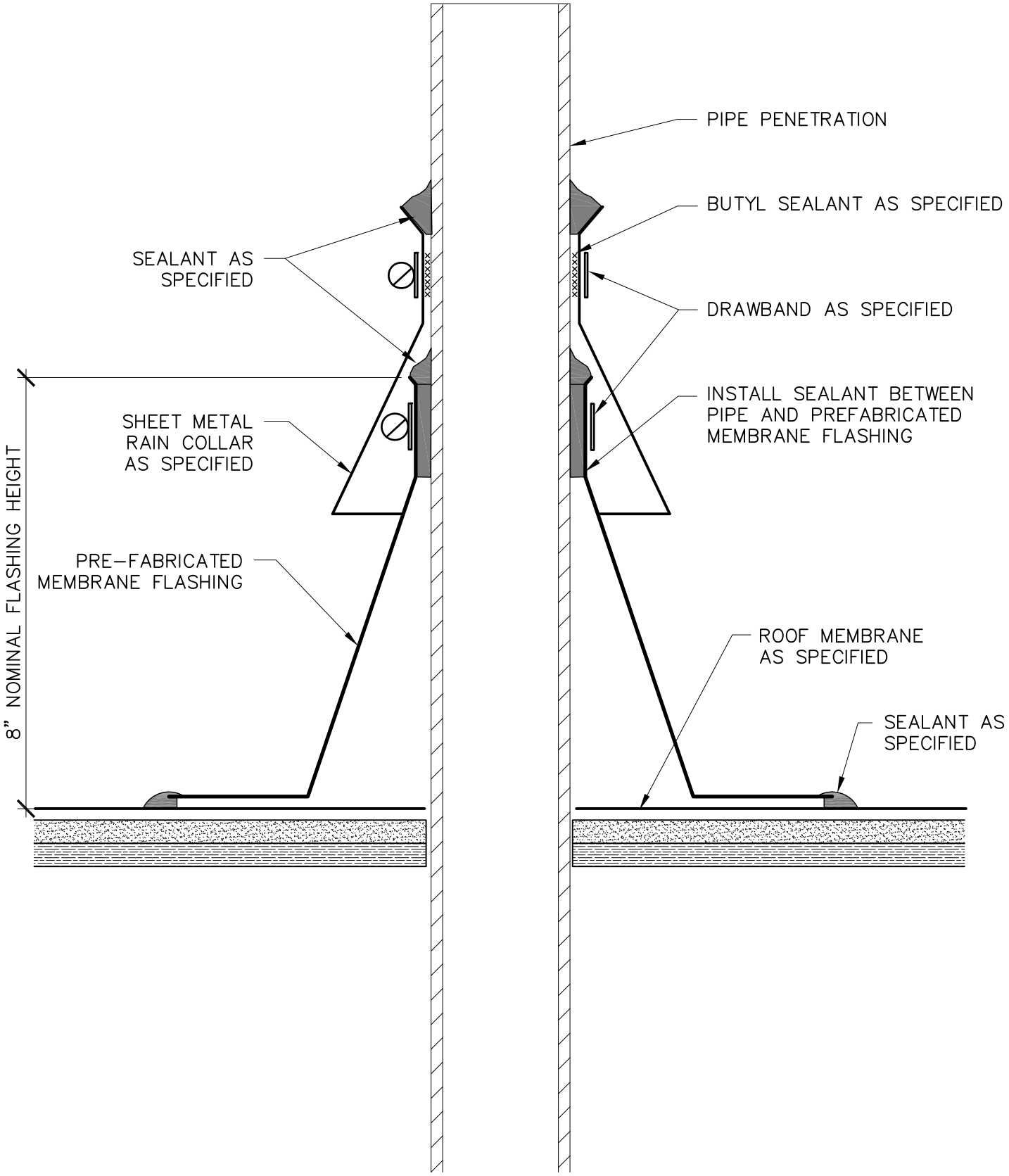

StructureTec®
Total Building Envelope Management Solution℠
4777 Campus Drive • Kalamazoo, MI 49008
Lake Cook Road, Ste C • Deerfield, IL 60015
473 Airport Road, Ste 1 • Butler, PA 16002
34119 W. Twelve Mile Road, Ste 270 • Farmington Hills, MI 48331

PRE-FABRICATED
SINGLE-PLY
PENETRATION FLASHING

2014 ROOF REPLACEMENT
LUCAS COUNTY COURTHOUSE
TOLEDO, OHIO

SCALE:	N.T.S.
APPROVED BY:	R.A.F.
DRAWN BY:	A.T.R.
DATE:	NOVEMBER 2014
PROJECT #:	T14084.RFG3

D-15

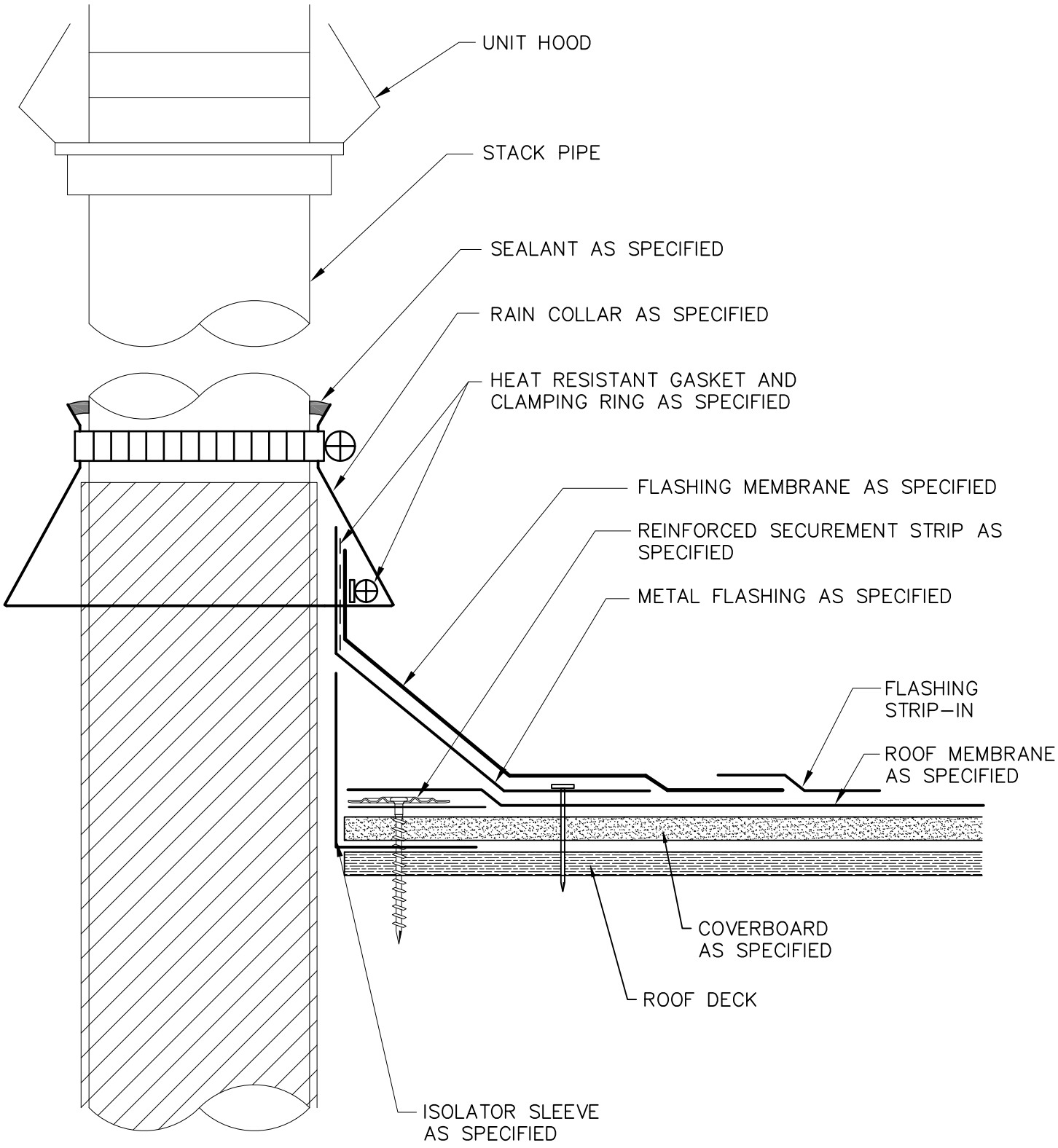

StructureTec®
Total Building Envelope Management Solution℠
4777 Campus Drive • Kalamazoo, MI 49008
Lake Cook Road, Ste C • Deerfield, IL 60015
473 Airport Road, Ste 1 • Butler, PA 16002
34119 W. Twelve Mile Road, Ste 270 • Farmington Hills, MI 48331

FLASHING AT
HEATED STACK PENETRATION

2014 ROOF REPLACEMENT
LUCAS COUNTY COURTHOUSE
TOLEDO, OHIO

SCALE:	N.T.S.
APPROVED BY:	R.A.F.
DRAWN BY:	A.T.R.
DATE:	NOVEMBER 2014
PROJECT #:	T14084.RFG3
	D–16

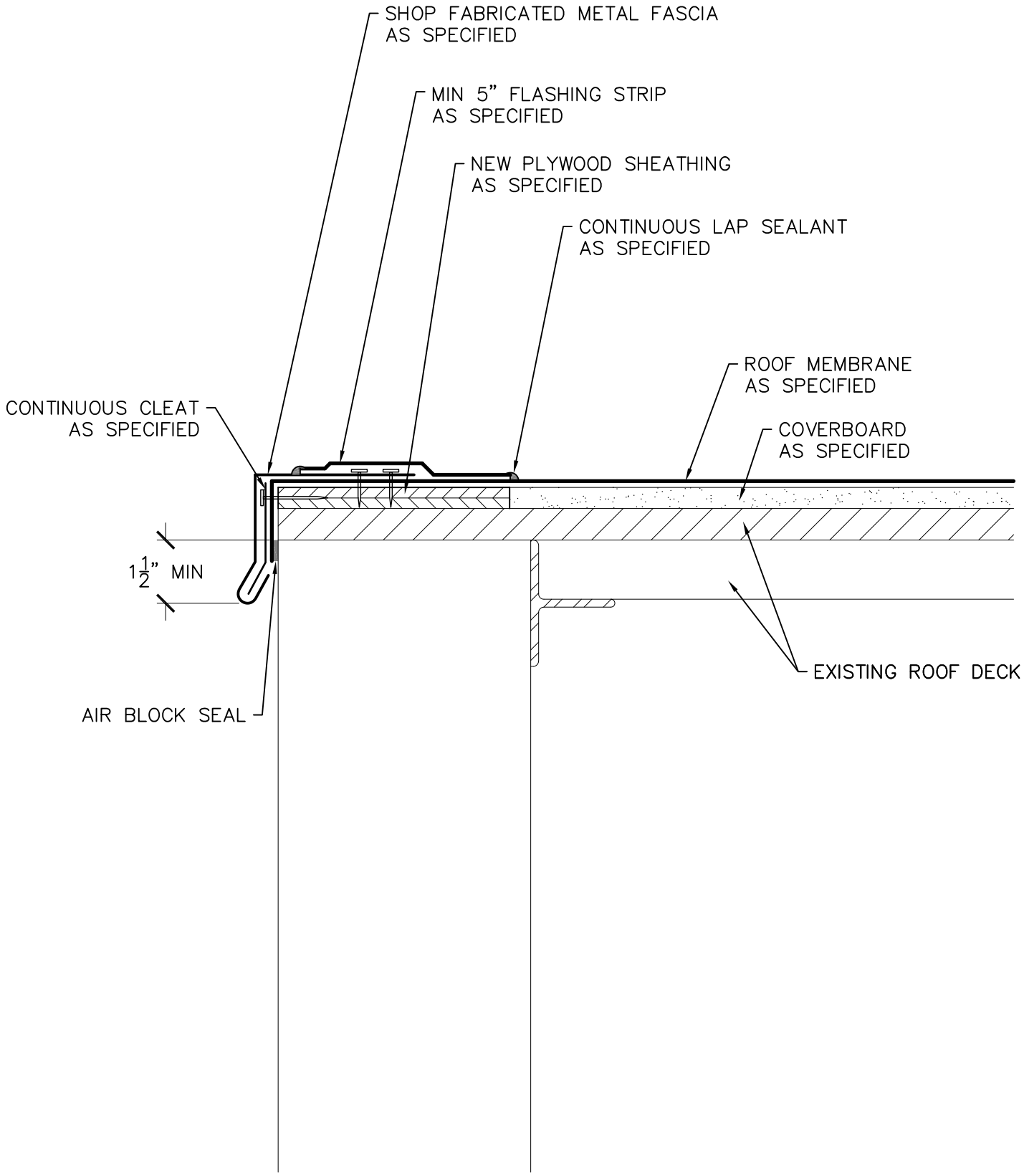

ADDENDUM #1 08–05–14

StructureTec®
Total Building Envelope Management Solution℠
4777 Campus Drive • Kalamazoo, MI 49008
Lake Cook Road, Ste C • Deerfield, IL 60015
473 Airport Road, Ste 1 • Butler, PA 16002
34119 W. Twelve Mile Road, Ste 270 • Farmington Hills, MI 48331

DRIP EDGE FASCIA

2014 ROOF REPLACEMENT
LUCAS COUNTY COURTHOUSE
TOLEDO, OHIO

SCALE:	N.T.S.
APPROVED BY:	R.A.F.
DRAWN BY:	A.T.R.
DATE:	AUGUST 2014
PROJECT #:	T14084.RFG3
	D–17

StructureTec® Group

Solutions for the Built Environment

- Maximize Return on Equity (ROE)
- Total Turnkey Approach
- Construction Management - **Platinum Program**℠
- Design/Build - ***PREMIER***℠ Engineered Systems
- Design/Bid/Build - **StructureTec**®

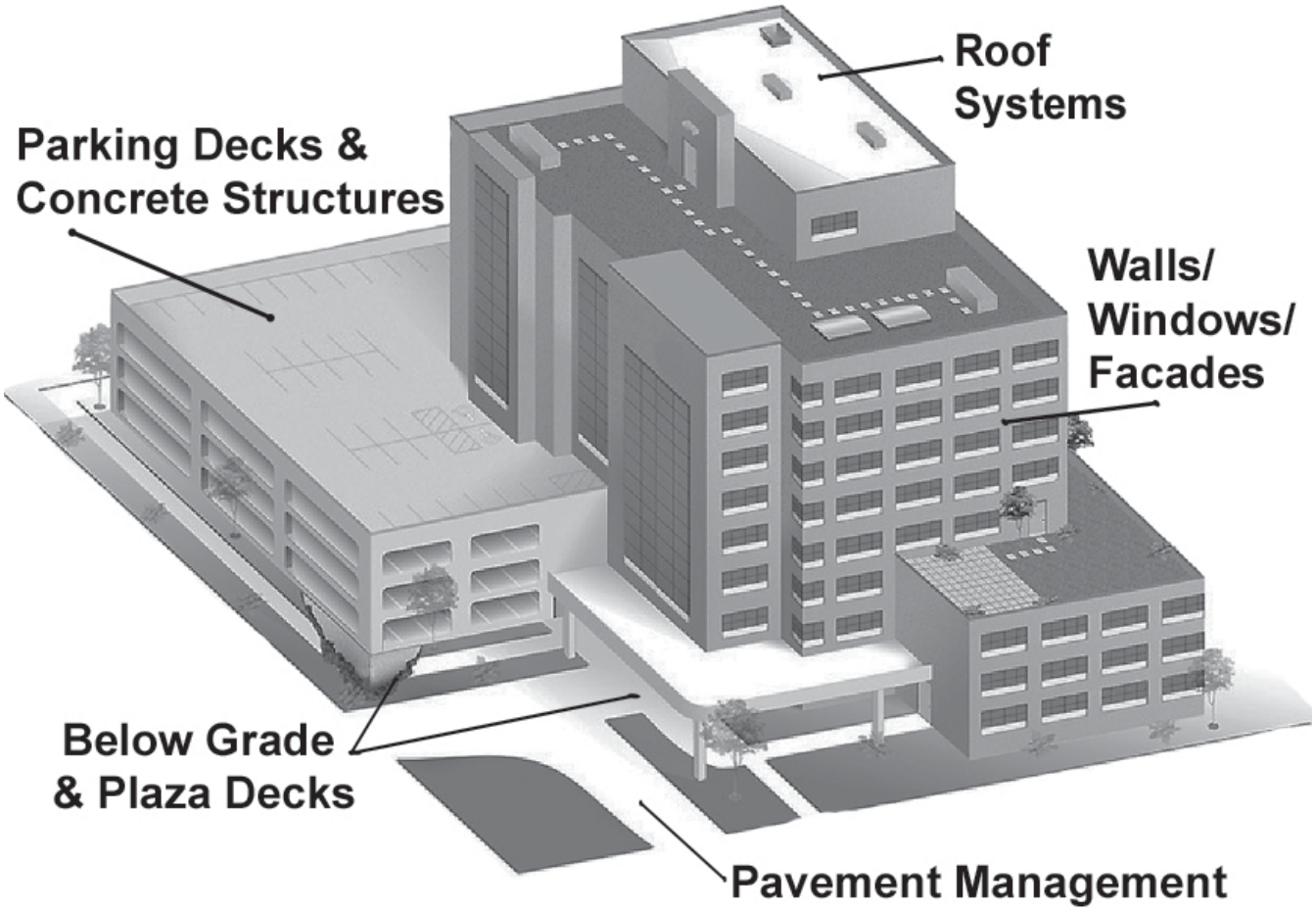

We Deliver ... Results

www.structuretec.com

(800) 745-STEC

Roofing Division • *Warranty Audit Program*℠ • **Construction Services Group**℠ • DATA MANAGEMENT SERVICES℠
THE RESTORATION GROUP℠ • **Pavement Management Group**℠ • **Buildings Products Group**™ • ***StructureScan***®